Comp-AC

User's Manual

ACS 140 AC Drives for
Speed Control of
$^1/_2$ to 3 Hp (0.37 to 2.2 kW)
AC Induction Motors

ABB

ACS 140 AC Drives for Speed Control of AC Induction Motors

User's Manual

ACS140U-US-04
3AUA489002B4591 R0101 Rev. D
Effective: 8/1/00
Supersedes: 10/25/99

© 2000 ABB Automation Inc.

Safety

Warning! Only a competent electrician should install the ACS 140.

Warning! Dangerous voltages are present when input power supply is connected. Wait at least 5 minutes after disconnecting the supply before removing the cover. Measure the voltage at the DC terminals (U_{C+}, U_{C-}) before servicing the unit (see **G**).

Warning! Even when the motor is stopped there are dangerous voltages present at Power Circuit terminals U1, V1, W1 (L,N) and U2, V2, W2 and U_{C+}, U_{C-}.

Warning! Even when the ACS 140 is powered down, dangerous external voltages may be present at relay terminals DO1A, DO1B, DO2A, DO2B.

Warning! The ACS 140 is not a field repairable unit. Never attempt to repair a broken unit; contact your Authorized Service Center for replacement.

Warning! The ACS 140 can start up automatically after an input voltage interruption if programmed for Automatic Restart after Power Outage.

Warning! When the control terminals of two or more ACS 100 / 140 / 400 units are connected in parallel, the auxiliary voltage for these control connections must be taken from a single source which can either be one of the units or an external supply.

Warning! Altering the parameter settings or device configurations will affect the function and performance of the ACS 140. Check that these changes do not cause any risk to persons or property.

Warning! There are several automatic reset functions in the ACS 140. If selected, they reset the unit and resume operation after a fault. These functions should not be selected if other equipment is not compatible with this kind of operation, or dangerous situations may cause personnel injury.

Warning! The heat sink may reach a high temperature (see **R**).

Note! For more technical information, contact the factory or your local ABB Sales Representative.

Table of Contents

Safety i

Installation 1

Reference Sections 2

Environmental Limits 2
Dimensions in (mm) 2
Installing the ACS 140 3
Removing the Cover 6
Attaching a Warning Sticker 6
Cable Connections 6
Terminal Interface 7
Type Designation Label and Code Key 8
Floating Network 8
Motor 8
Control Terminals 9
Connection Examples 10
Replacing the Cover 10
Power On 11
Protection Features 11
Motor Overload Protection 12
Loadability of ACS 140 12
Type Series and Technical Data 13
Product Conformity 18
Environmental Information 18

Programming 19

Control Panel 19

Control Modes 19
Output Display 20
Menu Structure 20
Setting Parameter Value 20
Menu Functions 21
Diagnostic Displays 21
Resetting the Drive from the Control Panel 22

ACS 140 Basic Parameters 23

Application Macros 27

Application Macro Factory (0) 28
Application Macro Factory (1) 29

Application Macro ABB Standard 30
Application Macro 3-wire 31
Application Macro Alternate 32
Application Macro Motor Potentiometer 33
Application Macro Hand - Auto 34
Application Macro PID Control 35
Application Macro Premagnetize 36

ACS 140 Complete Parameter List 37

Group 99: Start-up Data 42
Group 01: Operating Data 43
Group 10: Command Inputs 45
Group 11: Reference Select 47
Group 12: Constant Speeds 50
Group 13: Analog Inputs 51
Group 14: Relay Outputs 52
Group 15: Analog Output 53
Group 16: System Controls 54
Group 20: Limits 55
Group 21: Start/Stop 56
Group 22: Accel/Decel 58
Group 25: Critical Freq 59
Group 26: Motor Control 60
Group 30: Fault Functions 61
Group 31: Automatic Reset 64
Group 32: Supervision 65
Group 33: Information 67
Group 40: PID Control 68
Group 52: Serial Communication 74

Diagnostics 75

General 75
Alarm and Fault displays 75
Fault Resetting 75

ACS 140 EMC Instructions 79

APPENDIX A 85

Local Control vs. Remote Control 85
Local Control 85
Remote Control 86
Internal Signal Connections for the Macros 87

Installation

Study this manual carefully before proceeding. Failure to observe the warnings and instructions given may cause a malfunction or personal hazard.

1	CHECK the environment.	See **A**
2	INSTALL the ACS 140.	See **B, C**
3	REMOVE the cover.	See **D**
4	ATTACH a warning sticker in the language of your choice.	See **E**
5	IDENTIFY power and control terminals.	See **F, G, K**
6	CHECK voltage supply.	See **H, I**
7	CHECK the motor.	See **J**
8	CHECK the DIP switch.	See **K, L**
9	CONNECT power terminals.	See **F, G**
10	CONNECT control wires.	See **G, K, L**
11	REPLACE the cover.	See **M**
12	TURN the power on.	See **N**

Reference Sections

A Environmental Limits

- Ambient operating temperature 32 - 104 °F (*0 - 40 °C*), 0 - 86 °F (*0 - 30 °C*) if f_{sw} = 16 kHz
- Max. ambient temperature 122 °F (*50 °C*) if P_N and I_2 derated to 80 % and f_{sw} = 4 kHz
- Installation altitude 0 - 3300 ft. (*0 - 1000 m*) if P_N and I_2 100 %.
- Installation altitude 0 - 6600 ft. (*0 - 2000 m*) if P_N and I_2 derated 1 % every 330 ft. (*100 m*) above 3300 ft. (*1000 m*).
- Relative humidity less than 95 % (non-condensing)
- Storage temperature - 40 - 158 °F (*-40 °C - 70 °C*)
- Transport temperatureF - 40 - 158 °F (*-40 °C - 70 °C*)

The ACS 140 should be installed in clean and dry air, free from dripping water, corrosive materials and electrically conductive dust (pollution degree 2). The installation room must be locked or tool-openable.

B Dimensions in (*mm*)

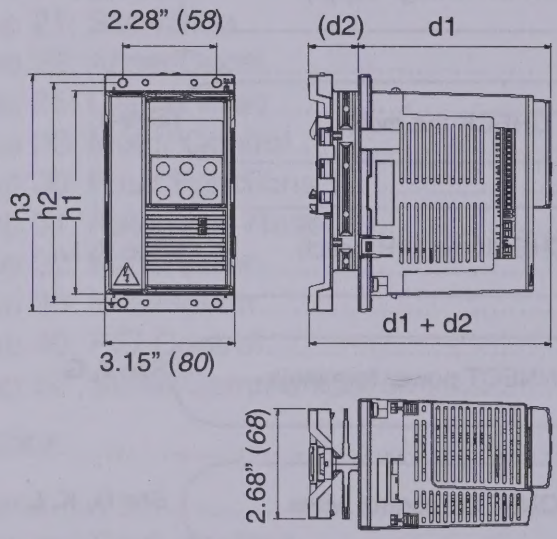

Frame Size IP 20	200 V Series						Weight (kg)	
	h1	h2	h3	d1	(d2)	d1+d2	1~	3~
A	4.96 (*126*)	5.35 (*136*)	5.75 (*146*)	4.60 (*117*)	1.25 (*32*)	5.87 (*149*)	1.98 (*0.9*)	1.76 (*0.8*)
B	4.96 (*126*)	5.35 (*136*)	5.75 (*146*)	4.60 (*117*)	1.72 (*69*)	7.32 (*186*)	2.65 (*1.2*)	2.43 (*1.1*)
C	7.80 (*198*)	8.19 (*208*)	8.58 (*218*)	4.60 (*117*)	2.05 (*52*)	6.65 (*169*)	3.53 (*1.6*)	3.31 (*1.5*)
D	8.86 (*225*)	9.25 (*235*)	9.65 (*245*)	4.88 (*124*)	2.05 (*52*)	6.93 (*176*)	4.19 (*1.9*)	3.97 (*1.8*)
H	4.96 (*126*)	5.35 (*136*)	5.75 (*146*)	4.68 (*119*)	0	4.68 (*119*)	1.76 (*0.8*)	-
	400 V Series							
A	4.96 (*126*)	5.35 (*136*)	5.75 (*146*)	4.60 (*117*)	1.25 (*32*)	5.87 (*149*)	-	1.76 (*0.8*)
B	4.96 (*126*)	5.35 (*136*)	5.75 (*146*)	4.60 (*117*)	1.72 (*69*)	7.32 (*186*)	-	2.43 (*1.1*)
C	7.80 (*198*)	8.19 (*208*)	8.58 (*218*)	4.60 (*117*)	2.05 (*52*)	6.65 (*169*)	-	3.31 (*1.5*)
D	8.86 (*225*)	9.25 (*235*)	9.65 (*245*)	4.88 (*124*)	2.05 (*52*)	6.93 (*176*)	-	3.97 (*1.8*)
H	4.96 (*126*)	5.35 (*136*)	5.75 (*146*)	4.68 (*119*)	0	4.68 (*119*)	-	1.54 (*0.7*)

C Installing the ACS 140

Warning! Before installing the ACS 140 ensure that the input power supply to the installation is off.

Standard Series (Frame sizes A, B, C and D)

Install the ACS 140 vertically. Leave 25 mm free space above and below the unit. Ensure that there is sufficient cool air in the cabinet to compensate for the power losses (power and control circuits) listed at the end of section **R**, "Technical Data".

Wall mounting

Screw in four (4) screws or affix nuts and bolts (Use the method appropriate for your mounting surface). Torque screws or bolts to 9 to 13 pound-inches (*1 - 1.5 Nm*).

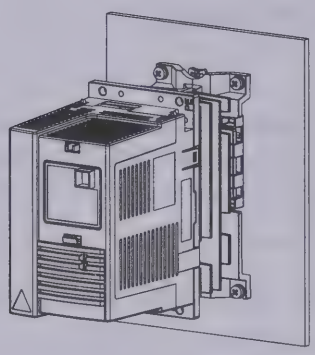

DIN rail (35 mm)

Press the lever on top of the unit while installing on / removing from DIN rail.

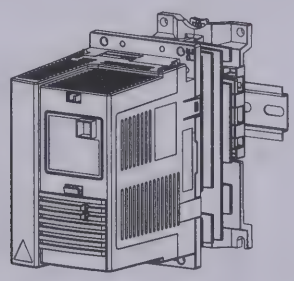

Flange mounting

The ACS 140 can be installed so that the heat sink is in an air duct. The power circuit losses will then be dissipated outside, leaving only the control circuit losses to be dissipated inside (see **R**).

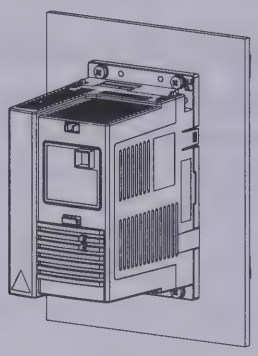

Heatsinkless Series (Frame size H)

Note! The frame size H **does not include the heatsink**. The heatsinkless ACS 140 is intended for applications where an external heatsink is available. Ensure that the area of installation fulfils the heat dissipation requirements.

Mounting Surface Requirements

Install the heatsinkless ACS 140 on an uncoated, clean metallic surface that fulfils the following requirements:

- A minimum thickness of 0.12" (*3 mm*).
- The surface must be stiff and flat. (max. flatness error 0.1 and max. roughness R_a 3.2 µm)

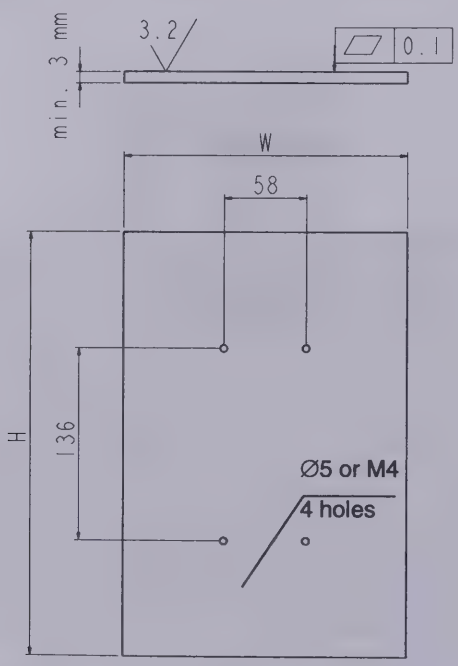

Heat Dissipation Requirements

Ensure that the mounting surface is capable of conducting power losses into the environment. The maximum temperature of the mounting plate may not exceed 176 °F (*80 °C*) under any circumstances.

The table below gives the power losses and minimum surface area requirements, when a 0.12" (*3 mm*) plate, capable of dissipating heat from both sides, is used as a heatsink (max. ambient temperature 104 °F (*40 °C*)). The 0.12" (*3 mm*) steel plate is only one example, any kind of external heatsink can be used if it meets the mounting surface and heat dissipation requirements.

Converter Type	Power Loss (W)	Minimum Area H x W in. x in. (*mm x mm*)
ACS 141-H18-1	7	5.91 x 5.91 (*150 x 150*)
ACS 141-H25-1	10	7.09 x 7.09 (*180 x 180*)
ACS 141-H37-1	12	7.87 x 7.87 (*200 x 200*)
ACS 141-H75-1	13	8.27 x 8.27 (*210 x 210*)
ACS 141-1H1-1	19	9.84 x 9.84 (*250 x 250*)
ACS 141-1H6-1	27	11.81 x 11.81 (*300 x 300*)
ACS 143-H75-3	14	8.66 x 8.66 (*220 x 220*)
ACS 143-1H1-3	20	10.24 x 10.24 (*260 x 260*)
ACS 143-1H6-3	27	11.81 x 11.81 (*300 x 300*)
ACS 143-2H1-3	39	19.69 x 19.69 (*500 x 500*)

Mechanical Installation

- Clean the mounting surface.
- Apply thermal grease between the ACS 140 and the mounting surface.
- Screw in using four screws or affix nuts and bolts (use the attachment method appropriate for your mounting surface). Torque screws or bolts to 9 to 13 pound-inches (*1 - 1.5 Nm*).

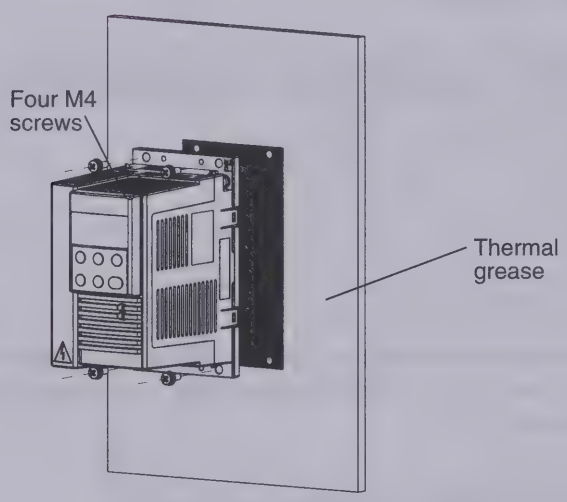

After installation, verify the thermal design by monitoring the temperature (parameter 0110) of the ACS 140. The thermal design is successful if the ACS 140's temperature does not exceed 185 °F (*85 °C*) under full load and maximum ambient temperature. The overtemperature fault code is FL3 and the trip limit is 194 °F (*90 °C*).

D Removing the Cover

1 Press the four buttons on the top and bottom corners of the unit simultaneously.
2 Remove the cover.

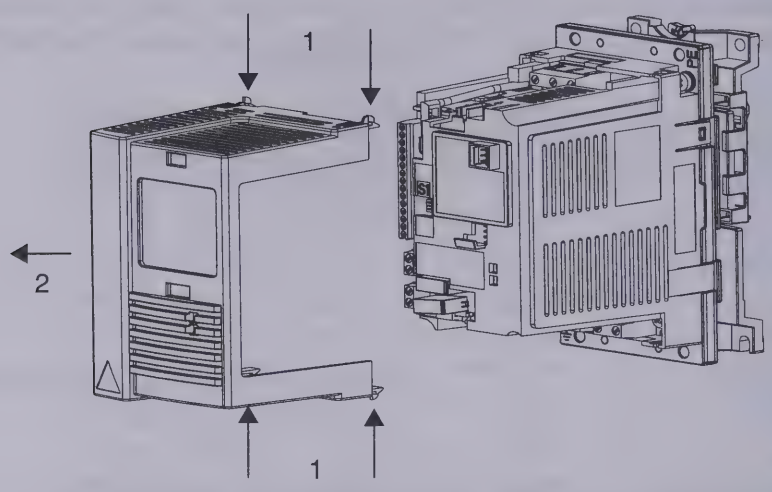

E Attaching a Warning Sticker

The packing box includes warning stickers in different languages. Attach a warning sticker in the language of your choice on the inside plastic skeleton as indicated above, in section G, “Terminal Interface”.

F Cable Connections

Terminal	Description	Note
L, N	1~ power supply input	(see **G**)
U1, V1, W1	3~ power supply input	Do not use 1~ supply!
PE	Protective Earth	Min. 4 mm^2 Cu wire.
U2, V2, W2	Power output to motor	Max. cable length depends on the unit type, (see **R**)
Uc+,Uc-	DC bus	For optional ACS braking unit/chopper.
⏚	Motor cable shield	

Follow local rules for cable cross-sections. Use shielded motor cable.
Route the motor cable away from control wires and the power supply cable to avoid electromagnetic interference.

⚠ **Note!** See "ACS 140 EMC Instructions" on page 79.

G Terminal Interface

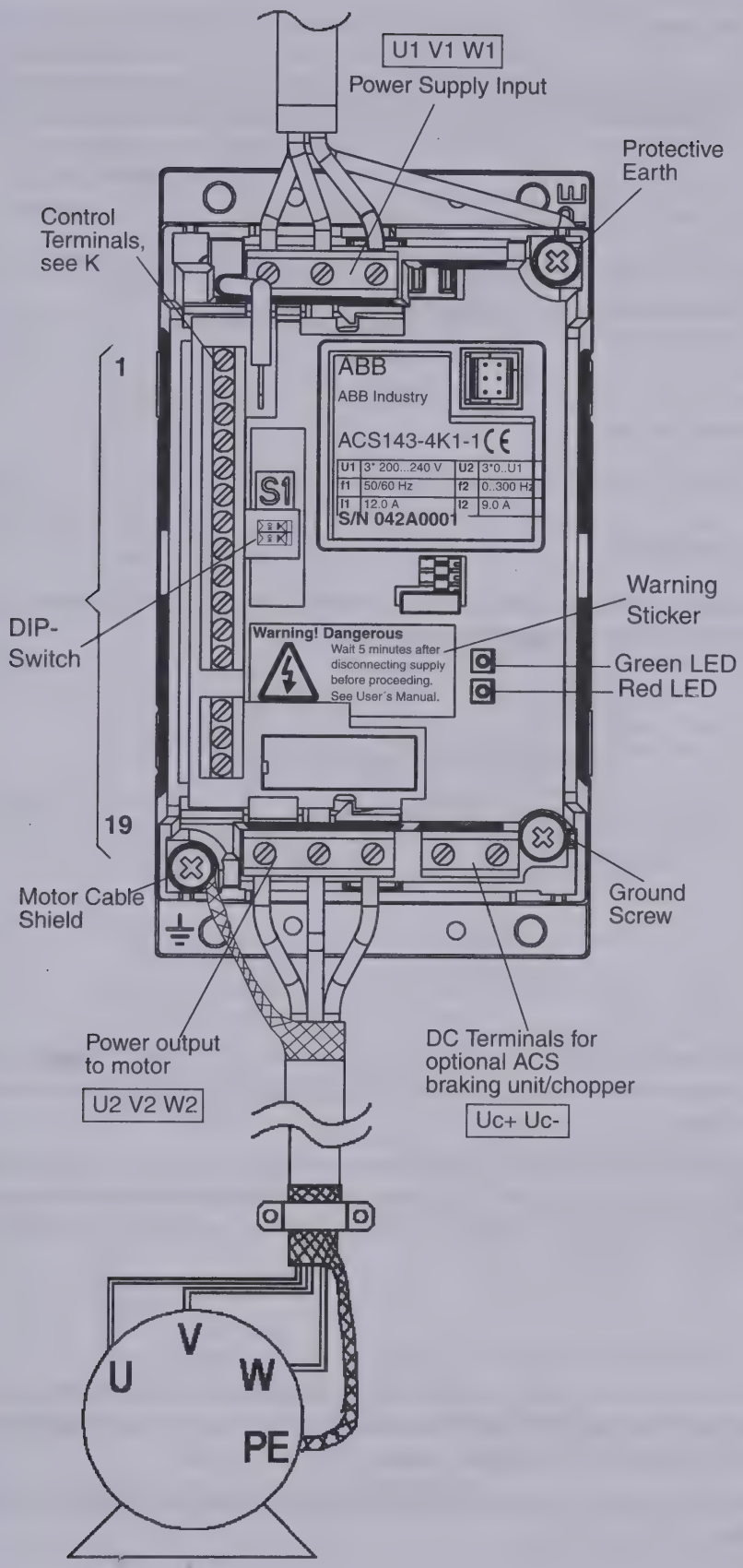

H Type Designation Label and Code Key

Supply:
ACS 141 = 1 ~
ACS 143 = 3 ~

ACS 141-xxx-1 = 200 V
ACS 141-xxx-3 = 400 V

Power:
4K1 = 4.1 kVA standard series (frames A, B, C and D)
4H1 = 4.1 kVA heatsinkless series (frame H)

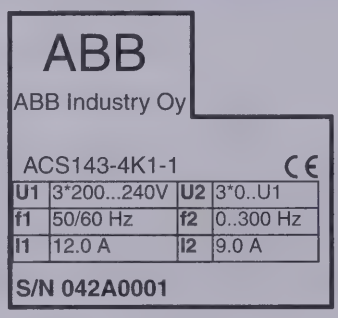

Serial number:
S/N 042A0001
0 = Year 2000
42 = Week 42
A0001=Internal number

I Floating Network

If the supply network is floating (IT network), remove the grounding screw (GND). Failure to do so may cause danger or damage the unit.

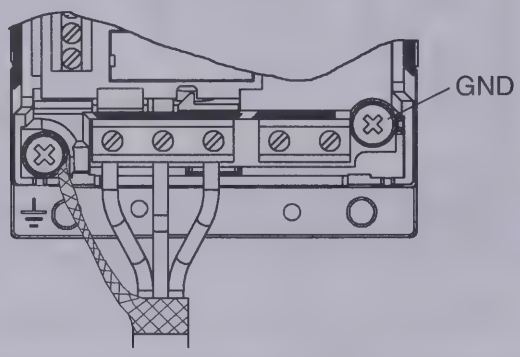

Do NOT use external RFI filters with floating networks. The input power supply becomes connected to ground through the filter capacitors which may cause a hazardous condition or damage to the drive.

Make sure that no excessive emission is propagated to neighboring low voltage networks. In some cases, the natural suppression in transformers and cables is sufficient. If in doubt, a supply transformer with static screening between the primary and secondary windings can be used.

J Motor

Check that the motor is compatible. The motor must be a three-phase induction motor, with U_N from 200 to 240 V or from 380 to 480 V and f_N either 50 Hz or 60 Hz. If the motor values differ from these, the group 99 parameter values must be changed.

The motor nominal current, I_N, must be less than the nominal output current of the ACS 140, I_2 (See **H** and **R**).

K Control Terminals

The signal types of analog inputs AI1 and AI2 are selected with DIP switches S1:1 and S1:2, S1 off = voltage signal, S1 on = current signal.

No.	Identification	Description	
1	SCR	Terminal for signal cable screen. (Connected internally to chassis ground.)	
2	AI 1	Analog input channel 1, programmable. Default: 0 - 10 V (R_i = 190 kΩ) (S1:1:U) <=> 0 - 50 Hz output frequency 0- 20 mA (R_i = 500 Ω) (S1:1:I) <=> 0 - 50 Hz output frequency Resolution 0.1 % accuracy ±1 %.	
3	AGND	Analog input circuit common. (Connected internally to chassis ground through 1 MΩ.)	
4	10 V	10 V/10 mA reference voltage output for analog input potentiometer, accuracy ±2 %.	
5	AI 2	Analog input channel 2, programmable. Default: 0 - 10 V (R_i = 190 kΩ) (S1:2:U) 0 - 20 mA (R_i = 500 Ω) (S1:2:I) Resolution 0.1 % accuracy ±1 %.	
6	AGND	Analog input circuit common. (Connected internally to chassis ground through 1 MΩ.)	
7	AO	Analog output, programmable. Default: 0-20 mA (load < 500 Ω) <=>0-50 Hz Accuracy: ± 3 % typically.	
8	AGND	Common for DI return signals.	
9	12 V	Aux. voltage output 12 V DC / 100 mA (reference to AGND). Short circuit protected.	
10	DCOM	Digital input common. To activate a digital input, there must be +12 V (or -12 V) between that input and DCOM. The 12 V may be provided by the ACS 140 (X1:9) as in the connection examples (see **L**) or by **an external 12-24 V (max 28 V) source of either polarity**.	
DI Configuration		**Factory (0)**	**Factory (1)**
11	DI 1	**Start.** Activate to start. Motor will ramp up to frequency reference. Disconnect to stop. Motor will coast to stop.	**Start.** If DI 2 is activated, momentary activation of DI 1 starts the ACS 140.
12	DI 2	**Reverse.** Activate to reverse rotation direction.	**Stop.** Momentary inactivation always stops the ACS 140.
13	DI 3	**Jog.** Activate to set output frequency to jogging frequency (default: 5 Hz).	**Reverse.** Activate to reverse rotation direction.
14	DI 4	**Has to be deactivated.**	**Has to be activated.**
15	DI 5	**Acceleration/deceleration ramp time selection** (5 s/ 60 s). Activate to select 60 s ramp times.	
16	DO 1A	Relay output 1, programmable (default: fault relay). Fault: DO 1A and DO 1B not connected. 12 - 250 V AC / 30 V DC, 10 mA - 2 A	
17	DO 1B		
18	DO 2A	Relay output 2, programmable (default: running). Running: DO 1A and DO 1B connected. 12 - 250 V AC / 30 V DC, 10 mA - 2 A	
19	DO 2B		

Digital input impedance 1.5 kΩ.

Use multi-strand 0.5-1.5 mm^2 wire.

Note! DI 4 is read only when powered-up. This input selects Factory macro 0 - two wire control or Factory macro 1 - three wire control.

Note! For fail safe reasons the fault relay signals a “fault”, when the ACS 140 is powered down.

Note! Terminals 3, 6 and 8 are at the same potential.

L Connection Examples

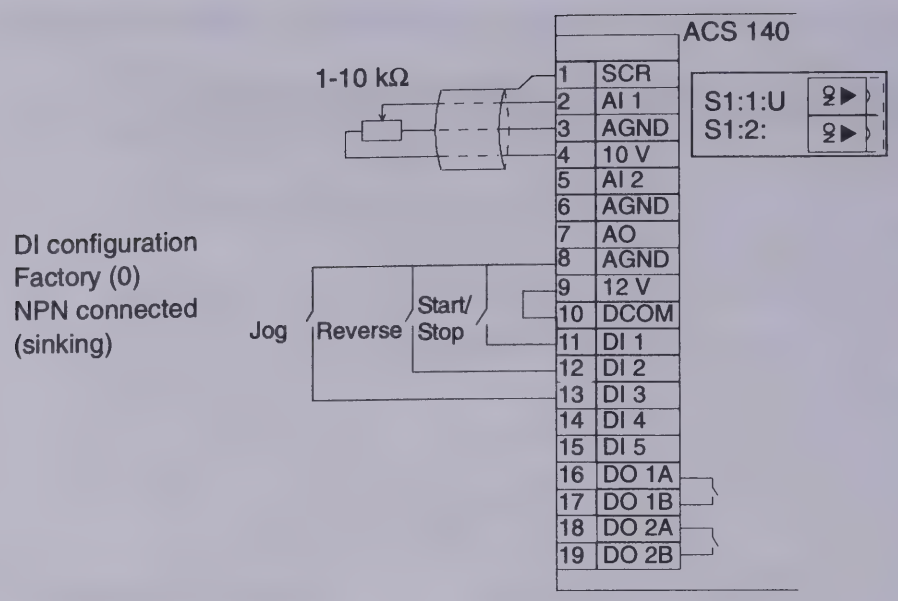

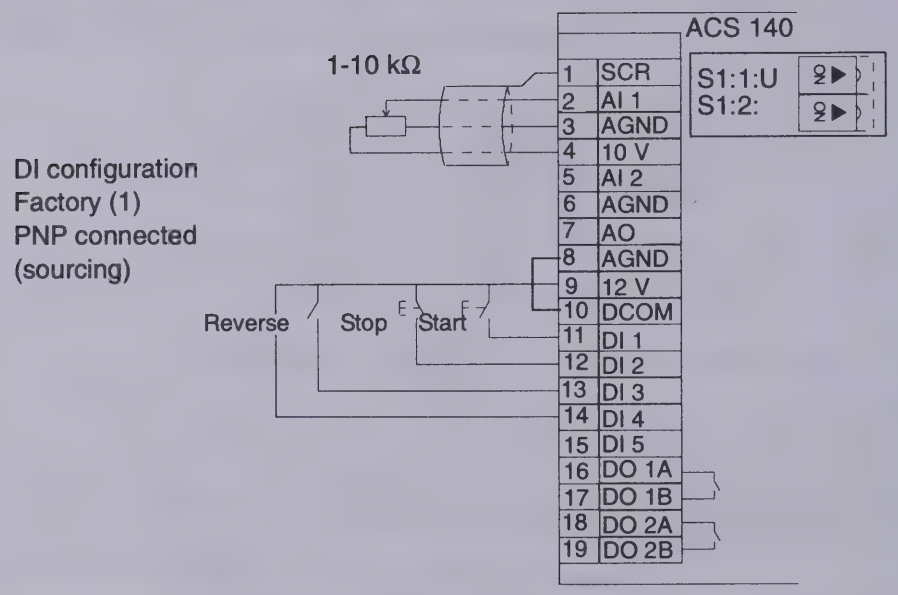

Frequency Reference from a Current Source

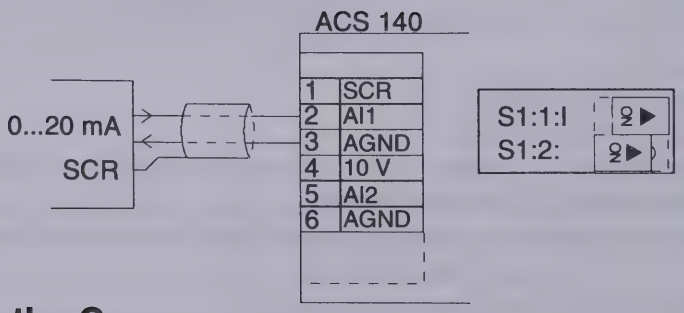

M Replacing the Cover

Do not turn the power on before replacing the cover.

N Power On

When power is supplied to the ACS 140, the green LED becomes illuminated.

O Protection Features

The ACS 140 has a number of protective features:

- Overcurrent
- Overvoltage
- Undervoltage
- Overtemperature
- Output ground fault
- Output short circuit
- Input phase loss (3~)
- Power loss ride through (500 ms)
- I/O terminal short circuit protection
- Long-term overcurrent limit trip 110 %
- Short-term current limit 150 %
- Motor overload protection (see **P**)
- Stall protection

The ACS 140 has the following LED alarm and fault indicators, for location of LED alarm indicators, see section G.

If the ACS 100 -PAN control panel is connected, see "Diagnostics" on page 75.

Red LED: off **Green LED: blinking**	**ABNORMAL CONDITION**
ABNORMAL CONDITION: • ACS 140 cannot fully follow control commands. • Blinking lasts 15 seconds.	POSSIBLE CAUSES: • Acceleration or deceleration ramp is too fast in relation to load torque requirement. • A short voltage interruption.

Red LED: on **Green LED: on**	**FAULT**
ACTION: • Give a stop signal to reset fault. • Give a start signal to restart the drive. NOTE: If the drive fails to start, check that the input voltage is within the tolerance range.	POSSIBLE CAUSES: • Transient overcurrent • Over-/undervoltage • Overtemperature CHECK: • the supply line for phase loss or disturbances. • the drive for mechanical problems that might cause overcurrent. • that heat sink is clean.

Red LED: blinking **Green LED: on**	**FAULT**
ACTION: • Turn the power off. • Wait for the LEDs to turn off. • Turn the power back on. **Caution!** This action may start the drive.	POSSIBLE CAUSE: • Output ground fault • Short circuit CHECK: • The isolation of the motor circuit.

Note! Whenever the ACS 140 detects a fault condition, the fault relay activates. The motor stops and the ACS 140 will wait to be reset. If the fault still persists and no external cause has been identified, contact the factory or your local Authorized ABB Drives Distributor.

P Motor Overload Protection

If the motor current I_{out} exceeds the nominal current I_{nom} of the motor (parameter 9906) for a prolonged period, the ACS 140 automatically protects the motor from overheating by tripping.

The trip time depends on the extent of the overload (I_{out} / I_{nom}), the output frequency and nominal motor frequency f_{nom}. Times given apply to a "cold start".

The ACS 140 provides overload protection in accordance with UL 508C. The default setting of motor thermal protection is **ON**. For more information, see Group 30: Fault Functions on page 61.

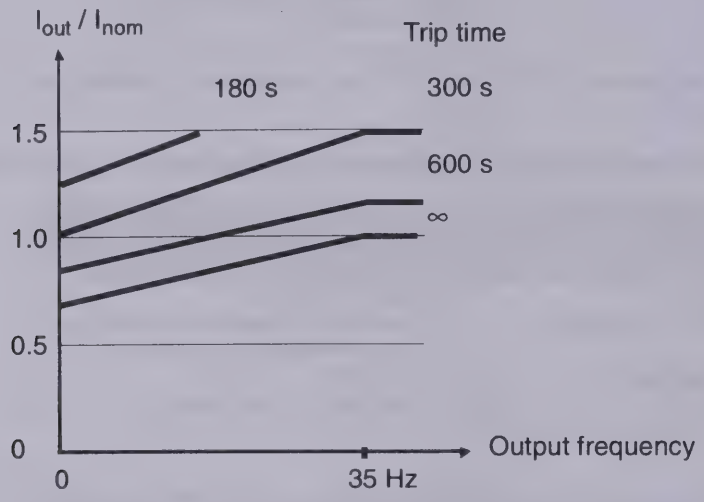

Q Loadability of ACS 140

In the event of an output overload, the ACS 140 will trip.

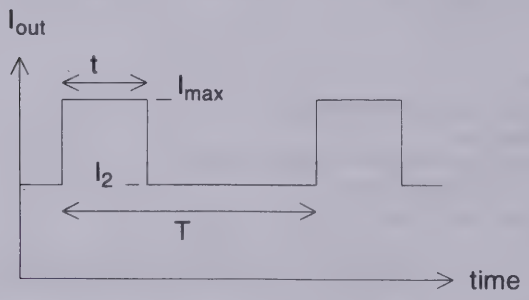

duty cycle = t/T

T< 10 min

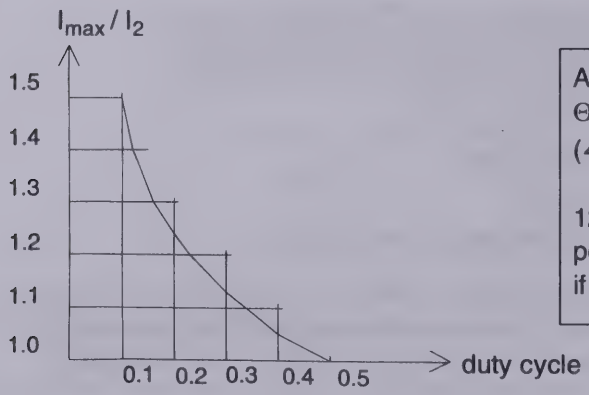

Ambient temperature, Θ_{amb} max. is 104 °F (*40 °C*).

122 °F (*50 °C*) is permissible, if I_2 is derated to 80 %.

R Type Series and Technical Data

Standard 200 V series						
Nominal motor P_N	**kW**	**0.12**	**0.18**	**0.25**	**0.37**	**0.55**
1~ Input	**ACS141-**	**K18-1**	**K25-1**	**K37-1**	**K75-1**	**1K1-1**
3~ Input	**ACS143-**	**-**	**-**	**-**	**K75-1**	**1K1-1**
Frame size		A				
Nominal ratings (See **H, P**)	**Unit**					
Input voltage U_1	V	200 V-240 V ±10 % 50/60 Hz (ACS 141: 1~, ACS 143: 3~)				
Continuous output current I_2 (4 kHz)	A	1.0	1.4	1.7	2.2	3.0
Continuous output current I_2 (8 kHz)	A	0.9	1.3	1.5	2.0	2.7
Continuous output current I_2 (16 kHz)	A	0.8	1.1	1.3	1.7	2.3
Max. output current $I_{2\,max}$ (4 kHz)	A	1.5	2.1	2.6	3.3	4.5
Max. output current $I_{2\,max}$ (8 kHz)	A	1.4	2.0	2.3	3.0	4.1
Max. output current $I_{2\,max}$ (16 kHz)	A	1.1	1.5	1.9	2.4	3.3
Output voltage U_2	V	0 - U_1 3~				
Input current I_1 1~	A	2.7	4.4	5.4	6.9	9.0
Input current I_1 3~	A	-	-	-	3.2	4.2
Switching frequency	kHz	4 (Standard) 8 (Low noise *) 16 (Silent **)				
Protection limits	(See **P**)					
Overcurrent (peak)	A	3.2	4.5	5.5	7.1	9.7
Overvoltage: Trip limit	V DC	420 (corresponds to 295 V input)				
Undervoltage: Trip limit	V DC	200 (corresponds to 142 V input)				
Overtemperature	°F (*°C*)	194 (*90*) (heat sink)				
Max. wire sizes						
Max. motor cable length	m	50	50	50	75	75
Power terminals	mm^2	4 single core / torque 0.8 Nm				
Control terminals	mm^2	0.5 - 1.5 (AWG22...AWG16) / torque 0.4 Nm				
Line fuse 1~ ***, ACS141-	A	6	6	10	10	10
Line fuse 3~ ***, ACS143-	A	-	-	-	6	6
Power losses						
Power circuit	W	7	10	12	13	19
Control circuit	W	8	10	12	14	16

* Derate ambient temp. to 86 °F (*30 °C*) or derate P_N and I_2 to 90 % (see I_2 (8 kHz)).
** Derate ambient temp. to 86 °F (*30 °C*) and derate P_N and I_2 to 75 % (see I_2 (16 kHz)).
*** Fuse type: UL class CC or T (symbol KTK-R, JJN or JJS). For non-UL installations IEC269 gG. Use 140 °F (*60 °C*) rated power cable (164 °F (*75 °C*) if T_{amb} above 113 °F (*45 °C*)).

Standard 200 V series					
Nominal motor P_N	**kW**	**0.75**	**1.1**	**1.5**	**2.2**
1~ Input	**ACS141-**	**1K6-1**	**2K1-1**	**2K7-1**	**4K1-1**
3~ Input	**ACS143-**	**1K6-1**	**2K1-1**	**2K7-1**	**4K1-1**
Frame size		B	C		D
Nominal ratings (See **H, P**)	**Unit**				
Input voltage U_1	V	200 V-240 V ±10 % 50/60 Hz (ACS 141: 1~, ACS 143: 3~)			
Continuous output current I_2 (4 kHz)	A	4.3	5.9	7.0	9.0
Continuous output current I_2 (8 kHz)	A	3.9	5.3	6.3	8.1
Continuous output current I_2 (16 kHz)	A	3.2	4.4	5.3	6.8
Max. output current $I_{2\,max}$ (4 kHz)	A	6.5	8.9	10.5	13.5
Max. output current $I_{2\,max}$ (8 kHz)	A	5.9	8.0	9.5	12.2
Max. output current $I_{2\,max}$ (16 kHz)	A	4.7	6.5	7.7	9.9
Output voltage U_2	V	0 - U_1 3~			
Input current I_1 1~	A	10.8	14.8	18.2	22.0
Input current I_1 3~	A	5.3	7.2	8.9	12.0
Switching frequency	kHz	4 (Standard) 8 (Low noise *) 16 (Silent **)			
Protection limits	(See **P**)				
Overcurrent (peak)	A	13.8	19.0	23.5	34.5
Overvoltage: Trip limit	V DC	420 (corresponds to 295 V input)			
Undervoltage: Trip limit	V DC	200 (corresponds to 142 V input)			
Overtemperature	°F (*°C*)	194 (*90*) (heat sink)	203 (*95*) (heat sink)		
Max. wire sizes					
Max. motor cable length	m	75	75	75	75
Power terminals	mm^2	4 single core / torque 0.8 Nm			
Control terminals	mm^2	0.5 - 1.5 (AWG22...AWG16) / torque 0.4 Nm			
Line fuse 1~ *** ACS141-	A	16	16	20	25
Line fuse 3~ *** ACS143-	A	6	10	10	16
Power losses					
Power circuit	W	27	39	48	70
Control circuit	W	17	18	19	20

* Derate ambient temp. to 86 °F (*30 °C*) or derate P_N and I_2 to 90 % (see I_2 (8 kHz)).

** Derate ambient temp. to 86 °F (*30 °C*) and derate P_N and I_2 to 75 % (see I_2 (16 kHz)).

*** Fuse type: UL class CC or T (symbol KTK-R, JJN or JJS). For non-UL installations IEC269 gG. Use 140 °F (*60 °C*) rated power cable (164 °F (*75 °C*) if T_{amb} above 113 °F (*45 °C*)).

Standard 400 V series							
Nominal motor P_N	**kW**	**0.37**	**0.55**	**0.75**	**1.1**	**1.5**	**2.2**
3~ Input	**ACS143-**	**K75-3**	**1K1-3**	**1K6-3**	**2K1-3**	**2K7-3**	**4K1-3**
Frame size		A		B		C	D
Nominal ratings (See **H, P**)	**Unit**						
Input voltage U_1	V	380V - 480V ±10 % 50/60 Hz (ACS 143: 3~)					
Continuous output current I_2 (4 kHz)	A	1.2	1.7	2.0	2.8	3.6	4.9
Continuous output current I_2 (8 kHz)	A	1.1	1.5	1.8	2.5	3.2	4.4
Continuous output current I_2 (16 kHz)	A	0.9	0.9	1.5	1.5	2.7	3.7
Max. output current $I_{2\,max}$ (4 kHz)	A	1.8	2.6	3.0	4.2	5.4	7.4
Max. output current $I_{2\,max}$ (8 kHz)	A	1.7	2.3	2.7	3.8	4.8	6.6
Max. output current $I_{2\,max}$ (16 kHz)	A	1.3	1.9	2.2	3.1	4.0	5.4
Output voltage U_2	V	0 - U_1					
Input current I_1 3~	A	2.0	2.8	3.6	4.8	5.8	7.9
Switching frequency	kHz	4 (Standard) 8 (Low noise *) 16 (Silent **)					
Protection limits	(See **P**)						
Overcurrent (peak)	A	4.2	5.6	6.6	9.2	11.9	16.3
Overvoltage: Trip limit	V DC	842 (corresponds to 595 V input)					
Undervoltage: Trip limit	V DC	333 (corresponds to 247 V input)					
Overtemperature	°F (*°C*)	194 (*90*) (heat sink)			203 (*95*) (heat sink)		
Max. wire sizes							
Max. motor cable length	m	30	50	75	75	75	75
Power terminals	mm^2	4 single core / torque 0.8 Nm					
Control terminals	mm^2	0.5 - 1.5 (AWG22...AWG16) / torque 0.4 Nm					
Line fuse 3~ *** ACS143-	A	6	6	6	6	10	10
Power losses							
Power circuit	W	14	20	27	39	48	70
Control circuit	W	14	16	17	18	19	20

* Derate ambient temp. to 86 °F (*30 °C*) or derate P_N and I_2 to 90 % (see I_2 (8 kHz)).
** Derate ambient temp. to 86 °F (*30 °C*) and derate P_N and I_2 to 75 %, except ACS 143-1K1-3 and ACS 143-2K1-3 derate to 55 % (see I_2 (16 kHz)).
*** Fuse type: UL class CC or T (symbol KTK-R, JJN or JJS). For non-UL installations IEC269 gG.
Use 140 °F (*60 °C*) rated power cable (164 °F (*75°C*) if T_{amb} above 113 °F (*45 °C*)).

Heatsinkless 200 V series							
Nominal motor P_N	**kW**	**0.12**	**0.18**	**0.25**	**0.37**	**0.55**	**0.75**
1~ Input	**ACS141-**	**H18-1**	**H25-1**	**H37-1**	**H75-1**	**1H1-1**	**1H6-1**
Frame size		H					
Nominal ratings (See **H, P**)	**Unit**						
Input voltage U_1	V	200 V-240 V ±10 % 50/60 Hz (ACS 141: 1~)					
Continuous output current I_2 (4 kHz)	A	1.0	1.4	1.7	2.2	3.0	4.3
Continuous output current I_2 (8 kHz)	A	0.9	1.3	1.5	2.0	2.7	3.9
Continuous output current I_2 (16 kHz)	A	0.8	1.1	1.3	1.7	2.3	3.2
Max. output current $I_{2\,max}$ (4 kHz)	A	1.5	2.1	2.6	3.3	4.5	6.5
Max. output current $I_{2\,max}$ (8 kHz)	A	1.4	2.0	2.3	3.0	4.1	5.9
Max. output current $I_{2\,max}$ (16 kHz)	A	1.1	1.5	1.9	2.4	3.3	4.7
Output voltage U_2	V	0 - U_1 3~					
Input current I_1 1~	A	2.7	4.4	5.4	6.9	9.0	10.8
Switching frequency	kHz	4 (Standard) 8 (Low noise *) 16 (Silent **)					
Protection limits	(See **P**)						
Overcurrent (peak)	A	3.2	4.5	5.5	7.1	9.7	13.8
Overvoltage: Trip limit	V DC	420 (corresponds to 295 V input)					
Undervoltage: Trip limit	V DC	200 (corresponds to 142 V input)					
Overtemperature	°F (*°C*)	194 (*90*) (heat sink)					
Max. wire sizes							
Max. motor cable length	m	50	50	50	75	75	75
Power terminals	mm^2	4 single core / torque 0.8 Nm					
Control terminals	mm^2	0.5 - 1.5 (AWG22...AWG16) / torque 0.4 Nm					
Line fuse 1~ *** ACS141-	A	6	6	10	10	10	16
Power losses							
Power circuit	W	7	10	12	13	19	27
Control circuit	W	8	10	12	14	16	17

* Derate ambient temp. to 86 °F (*30 °C*) or derate P_N and I_2 to 90 % (see I_2 (8 kHz)).
** Derate ambient temp. to 86 °F (*30 °C*) and derate P_N and I_2 to 75 % (see I_2 (16 kHz)).
*** Fuse type: UL class CC or T (symbol KTK-R, JJN or JJS). For non-UL installations IEC269 gG. Use 140 °F (*60 °C*) rated power cable (164 °F (*75 °C*) if T_{amb} above 113 °F (*45 °C*)).

Heatsinkless 400 V series					
Nominal motor P_N	**kW**	**0.37**	**0.55**	**0.75**	**1.1**
3~ Input	**ACS143-**	**H75-3**	**1H1-3**	**1H6-3**	**2H1-3**
Frame size		H			
Nominal ratings (See **H, P**)	**Unit**				
Input voltage U_1	V	380V - 480V ±10 % 50/60 Hz (ACS 143: 3~)			
Continuous output current I_2 (4 kHz)	A	1.2	1.7	2.0	2.8
Continuous output current I_2 (8 kHz)	A	1.1	1.5	1.8	2.5
Continuous output current I_2 (16 kHz)	A	0.9	0.9	1.5	1.5
Max. output current $I_{2\,max}$ (4 kHz)	A	1.8	2.6	3.0	4.2
Max. output current $I_{2\,max}$ (8 kHz)	A	1.7	2.3	2.7	3.8
Max. output current $I_{2\,max}$ (16 kHz)	A	1.3	1.9	2.2	3.1
Output voltage U_2	V	0 - U_1			
Input current I_1 3~	A	2.0	2.8	3.6	4.8
Switching frequency	kHz	4 (Standard) 8 (Low noise *) 16 (Silent **)			
Protection limits	(See **P**)				
Overcurrent (peak)	A	4.2	5.6	6.6	9.2
Overvoltage: Trip limit	V DC	842 (corresponds to 595 V input)			
Undervoltage: Trip limit	V DC	333 (corresponds to 247 V input)			
Overtemperature	°F (°C)	194 (*90*) (heat sink)			203 (*95*) (heat sink)
Max. wire sizes					
Max. motor cable length	m	30	50	75	75
Power terminals	mm^2	4 single core / torque 0.8 Nm			
Control terminals	mm^2	0.5 - 1.5 (AWG22...AWG16) / torque 0.4 Nm			
Line fuse 3~ *** ACS143-	A	6	6	6	6
Power losses					
Power circuit	W	14	20	27	39
Control circuit	W	14	16	17	18

* Derate ambient temp. to 86 °F (*30 °C*) or derate P_N and I_2 to 90 % (see I_2 (8 kHz)).

** Derate ambient temp. to 86 °F (*30 °C*) and derate P_N and I_2 to 75 %, except ACS 143-1K1-3 and ACS 143-2K1-3 derate to 55 % (see I_2 (16 kHz)).

*** Fuse type: UL class CC or T (symbol KTK-R, JJN or JJS). For non-UL installations IEC269 gG. Use 140 °F (*60 °C*) rated power cable (164 °F (*75 °C*) if T_{amb} above 113 °F (*45 °C*)).

S Product Conformity

CE Marking

The ACS 140 complies with the requirements of the European

- Low Voltage Directive 73/23/EEC with amendments
- EMC Directive 89/336/EEC with amendments

Corresponding declarations and a list of main standards are available on request.

Note! See "ACS 140 EMC Instructions" on page 79.

A frequency converter and a Complete Drive Module (CDM) or a Basic Drive Module (BDM), as defined in IEC 61800-2, is not considered as a safety related device mentioned in the Machinery Directive and related harmonized standards. The CDM/BDM/frequency converter can be considered part of a safety device if the specific function of the CDM/BDM/ frequency converter fulfils the requirements of the particular safety standard. The specific function of the CDM/BDM/frequency converter and the related safety standard is mentioned in the documentation of the equipment.

UL, ULc and C-Tick Markings

	Frame size	UL	ULc	C-Tick
ACS 140	A	approved	approved	pending
ACS 140	B	approved	approved	pending
ACS 140	C	approved	approved	pending
ACS 140	D	approved	approved	pending
ACS 140	H	pending	pending	pending

The ACS 140 is designed for use on a circuit capable of delivering no more than 65 kA.

T Environmental Information

A product to be disposed of contains valuable raw material that should be recycled, thus preserving energy and natural resources. Instructions for disposal are available from ABB sales and service companies.

Programming

Control Panel

The control panel can be connected to and detached from the drive at any time. The panel can be used to copy parameters to other ACS 140 drives with the same software revision (parameter 3301).

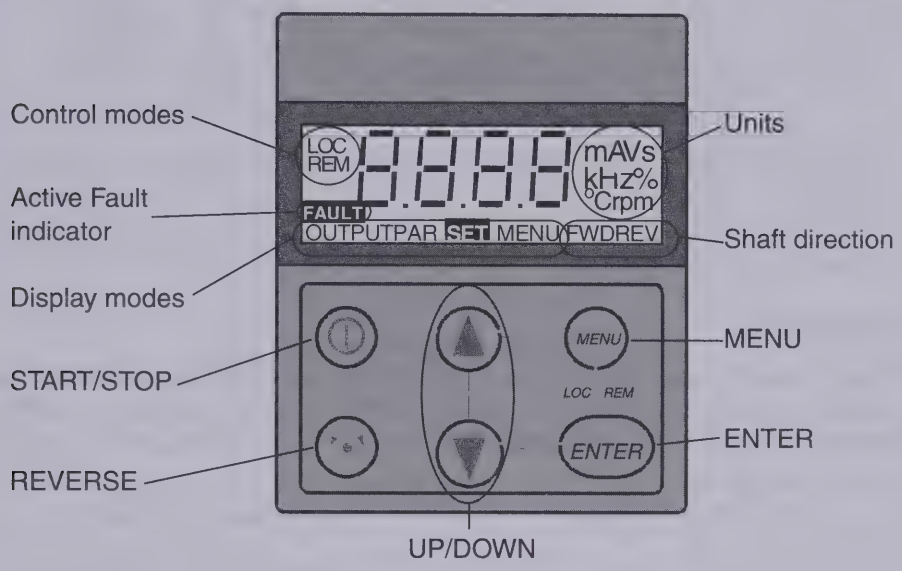

Control Modes

The very first time the drive is powered up, it is controlled from the Control Terminals (remote control, **REM**). The ACS 140 is controlled from the control panel when the drive is in local control (**LOC**).

Switch to local control (**LOC**) by pressing and holding the MENU and ENTER buttons down simultaneously until first **Loc** or later **LCr** is displayed:

- If the buttons are released while **Loc** is displayed, the panel frequency reference is set to the current external reference and the drive is stopped.
- When **LCr** is displayed, the current run/stop status and the frequency reference are copied from the user I/O.

Start and stop the drive by pressing the START/STOP button.

Change the shaft direction by pressing the REVERSE button.

Switch back to remote control (**REM**) by pressing and holding the MENU and ENTER buttons down simultaneously until **rE** is displayed.

Shaft Direction

FWD / REV Visible	• Shaft direction is forward / reverse • Drive is running and at set point
FWD / REV Blinking rapidly	Drive is accelerating / decelerating.
FWD / REV Blinking slowly	Drive is stopped.

Output Display

When the control panel is powered up, the panel displays the actual output frequency. Whenever the MENU button is pressed and held, the control panel resumes this **OUTPUT** display.

To toggle between output frequency and output current, press the UP or DOWN button.

To set the output frequency in local control (**LOC**), press ENTER. Pressing the UP/DOWN buttons changes the output immediately. Press ENTER again to return to **OUTPUT** display.

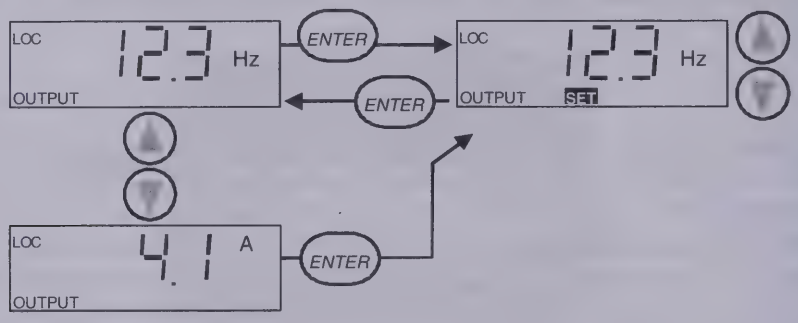

Menu Structure

ACS 140 has a large number of parameters. Of these, only the '**basic parameters**' are initially visible. The menu function -LG- is used to make the full parameter set visible.

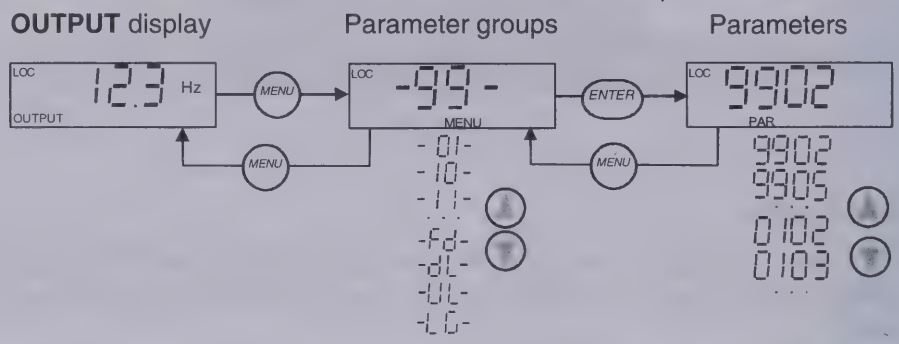

Setting Parameter Value

Press ENTER to view the parameter value.
To set a new value, press and hold ENTER until **SET** is displayed.

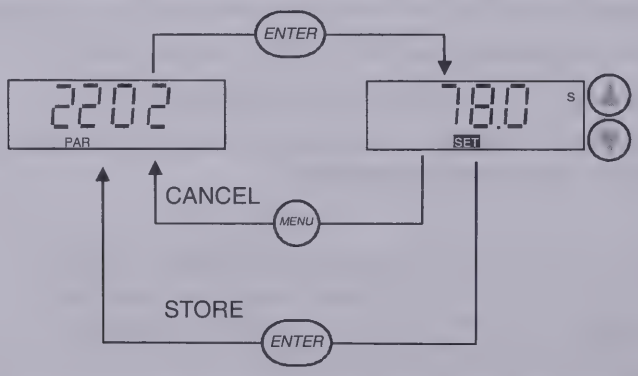

Note! SET blinks if the parameter value is altered. **SET** is not displayed if the value cannot be altered.

Note! To view the parameter default value, press the UP/DOWN buttons simultaneously.

Menu Functions

Scroll the Parameter groups for the desired menu function. Press and hold ENTER until the display blinks to start the function.

Note! Parameter copying does not affect all parameters. The excluded parameters are: 9905 MOTOR NOM VOLT, 9906 MOTOR NOM CURR, 9907 MOTOR NOM FREQ, 9908 MOTOR NOM SPEED, 5201 STATION ID. See "ACS 140 Complete Parameter List" on page 37, for a description of the parameters.

Copy parameters from panel to drive (download)

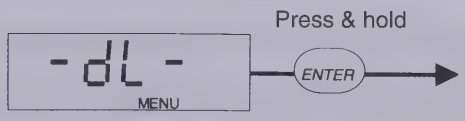

Note! Drive must be stopped and in local control. Parameter 1602 PARAMETER LOCK must be set to 1 (OPEN).

Copy parameters from drive to panel (upload)

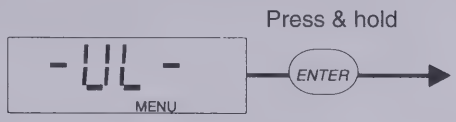

Note! Drive must be stopped and in local control. Parameter 1602 PARAMETER LOCK must be set to 1 (OPEN).

Note! Not all parameters are uploaded to the panel, see above.

Select between basic and full menu

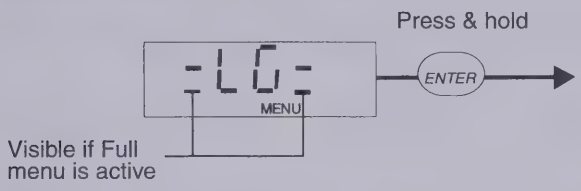

Note! Selection of full menu remains after power down

Diagnostic Displays

When the red LED of the ACS 140 is on or blinking, a fault is active. The relevant fault message flashes in the panel display.

When the green LED of the ACS 140 is blinking, an alarm is active. The relevant alarm message is shown in the panel display. Alarms 1-7 arise from button operation and the green LED does not blink for them.

The alarm and fault message disappear by pressing MENU, ENTER or the arrow buttons of the control panel. The message will reappear after a few seconds if the keypad is not touched and an alarm or fault is still active.

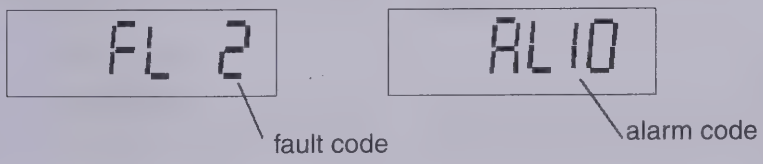

Refer to Diagnostics section for a complete list of alarms and faults.

Resetting the Drive from the Control Panel

When the red LED of the ACS 140 is on or blinking, a fault is active.

To reset a fault when the red LED is on, press the START/STOP button.
Caution! This may start the drive, when in remote control.

To reset a fault when the red LED is blinking, turn the power off.
Caution! Turning the power on again may start the drive immediately.

The relevant fault code (see Diagnostics) flashes in the panel display until the fault is reset or the display is "cleared".

You can "clear" the display without resetting the fault by pressing any button. The word FAULT will be displayed.

Note! If no other button is pressed within 15 seconds and the fault is still active, the fault code will be displayed again.

After a power failure, the drive will revert to the same control mode (**LOC** or **REM**) as before the power failure.

ACS 140 Basic Parameters

The ACS 140 has a large number of parameters. Of these, only the 'basic parameters' are initially visible.

Setting up only a few basic parameters is sufficient in applications where the preprogrammed application macros of the ACS 140 can provide all desired functionality. For a full description of programmable features provided by the ACS 140, see "ACS 140 Complete Parameter List" starting on page 37.

The following table lists the basic parameters.

S = Parameters can be modified only when the drive is stopped.

Code	Name	User	S
Group 99 **START-UP DATA**			
9902	**APPLIC MACRO** Selects application macro. Sets parameter values to their default values. Refer to "Application Macros" starting on page 27, for a detailed description of each macro. 0 = FACTORY MACRO — 4 = MOTOR POT 1 = ABB STANDARD — 5 = HAND - AUTO 2 = 3-WIRE — 6 = PID CONTROL 3 = ALTERNATE — 7 = PREMAGN Default value: 0 (FACTORY MACRO)		✓
9905	**MOTOR NOM VOLT** Nominal motor voltage from the motor rating plate. Range of this parameter depends on the type of the ACS 140 (200/400 V unit). Selection for 200 V units: 200, 208, 220, 230, 240 V Selection for 400V units: 380, 400, 415, 440, 460, 480 V Default value for 200 V unit: 230 V Default value for 400 V unit: 460 V		✓
9906	**MOTOR NOM CURR** Nominal motor current from motor rating plate. Values for this parameter range from 0.5* I_N - 1.5* I_N, where I_N is the nominal current of the ACS 140. Default value: I_N		✓
9907	**MOTOR NOM FREQ** Nominal motor frequency from motor rating plate. Range: 0 - 300 Hz Default: 60 Hz		✓
9908	**MOTOR NOM SPEED** Nominal motor speed from motor rating plate. Range 0 - 3600 rpm. Default: 1750		✓

Code	Name	User	S
Group 01 OPERATING DATA			
0128	**LAST FAULT** Last recorded fault (0 = no fault). See “Diagnostics” starting on page 75. Can be cleared with the control panel by pressing the UP and DOWN buttons simultaneously when in parameter set mode.		
Group 10 COMMAND INPUTS			
1003	**DIRECTION** Rotation direction lock. 1 = FORWARD 2 = REVERSE 3 = REQUEST If you select REQUEST, the direction is set according to the given direction command. Default: 3 (REQUEST)		✓
Group 11 REFERENCE SELECT			
1105	**EXT REF1 MAX** Maximum frequency reference in Hz. Range: 0 -300 Hz Default value: 60 Hz		
Group 12 CONSTANT SPEEDS			
1202	**CONST SPEED 1** Range for all constant speeds: 0 - 300 Hz Default value: 5 Hz		
1203	**CONST SPEED 2** Default value: 10 Hz		
1204	**CONST SPEED 3** Default value: 15 Hz		

Code	Name	User	S
Group 13 ANALOG INPUTS			
1301	**MINIMUM AI1** Minimum value of AI1 in percent. Defines relative analog input value where frequency reference reaches minimum value. Range: 0 - 100 % Default value: 0 %		
Group 15 ANALOG OUTPUT			
1503	**AO CONTENT MAX** Defines output frequency where analog output reaches 20 mA. Range: 0 -300 Hz. Default value: 50 Hz **Note!** Analog output content is programmable. Values given here are valid only if other analog output configuration parameters have not been modified. A description of each parameter is given in "ACS 140 Complete Parameter List" starting on page 37.		
Group 20 LIMITS			
2003	**MAX CURRENT** Maximum output current. Range: 0.5* I_N - 1.5* I_N, where I_N is nominal current of the ACS 140. Default value: 1.5 * I_N		
2008	**MAXIMUM FREQ** Maximum output frequency. Range: 0 - 300 Hz Default value: 60 Hz		✓

Code	Name	User	S
Group 21 START/STOP			
2102	**STOP FUNCTION** Conditions during motor stopping. 1 = COAST Motor coasts to stop. 2 = RAMP Ramp deceleration as defined by the active deceleration time 2203 DECELER TIME 1 or 2205 DECELER TIME 2. Default value: 1 (COAST)		
Group 22 ACCELER/DECELER			
2202	**ACCELER TIME 1** Ramp 1: time from zero to maximum frequency (0 - MAXIMUM FREQ). Range for all ramp time parameters is 0.1 - 1800 s. Default value: 5.0 s		
2203	**DECELER TIME 1** Ramp 1: time from maximum to zero frequency (MAXIMUM FREQ - 0). Default value: 5.0 s		
2204	**ACCELER TIME 2** Ramp 2: time from zero to maximum frequency (0 - MAXIMUM FREQ). Default value: 60.0 s		
2205	**DECELER TIME 2** Ramp 2: time from maximum to zero frequency (MAXIMUM FREQ - 0). Default value: 60.0 s		
Group 26 MOTOR CONTROL			
2606	**U/f RATIO** U/f below field weakening point. 1 = LINEAR 2 = SQUARE LINEAR is preferred for constant torque applications. SQUARE is preferred for centrifugal pump and fan applications to increase motor efficiency and to reduce motor noise. Default value: 1 (LINEAR)		✓
Group 33 INFORMATION			
3301	**SW VERSION** Software version code.		

S = Parameters can be modified only when the drive is stopped.

Application Macros

Application Macros are preprogrammed parameter sets. They minimize the number of different parameters to be set during start-up. The Factory Macro is the factory-set default macro.

Note! The Factory Macro is intended for applications where there is no control panel available. **It should not be used when a control panel is in use because macro dependent parameters cannot be set, with all other macros, the control panel is needed.**

Parameter Values

Selecting an application macro with parameter 9902 APPLIC MACRO will set all other parameters (except group 99 start-up data parameters, the parameter lock 1602 and group 52 serial communication parameters) to their default values.

Default values of certain parameters depend on the selected macro. These are listed with the description of each macro. Default values for other parameters are given in "ACS 140 Complete Parameter List".

Connection Examples

In the following connection examples please note:

- All the digital inputs are connected using source (PNP) logic.
- The signal types of analog inputs AI1 and AI2 are selected with DIP switches S1:1 and S1:2.

Frequency reference is given with	DIP switch S1:1 or S1:2	
voltage signal (0 - 10 V)	off	
current signal (0 - 20 mA)	on	

Application Macro Factory (0)

This macro is intended for applications where there is no control panel available. It provides a general purpose 2-wire I/O configuration.

The value of parameter 9902 is 0. DI4 is not connected.

Input signals

- Start, stop and direction (DI1,2)
- Analog reference (AI1)
- Constant speed 1 (DI3)
- Ramp pair 1/2 selection (DI5)

Output signals

- An. output AO: Frequency
- Relay output 1: Fault
- Relay output 2: Running

DIP switch S1

S1:1:U

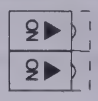

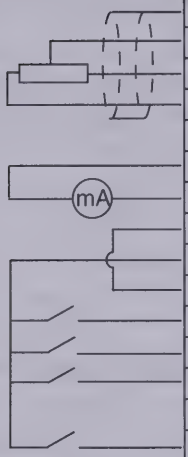

Control Terminals		Function
1	SCR	
2	AI 1	External reference 1; 0...10 V <=> 0...60 Hz
3	AGND	
4	10 V	Reference voltage 10 VDC
5	AI 2	Not used
6	AGND	
7	AO	Output frequency 0...20 mA <=> 0...60 Hz
8	AGND	
9	+12 V	+12 VDC
10	DCOM	
11	DI 1	**Start/Stop**. Activate to start ACS 140
12	DI 2	**Fwd/Rev**. Activate to reverse rotation direction
13	DI 3	Constant speed 1. Default: 5Hz
14	DI 4	**Leave unconnected!***
15	DI 5	Ramp pair selection. Activate to select ramp pair 2. Defaults: 5 s (ramp pair 1), 60 s (ramp pair 2)
16	DO 1A	Relay output 1
17	DO 1B	**Fault**: open
18	DO 2A	Relay output 2
19	DO 2B	**Running**: closed

***Note!** DI 4 is used to configure the ACS 140. It is read only once, when power is connected. All parameters marked with * are determined by the DI4 input.

Factory (0) parameter values:

*1001 EXT 1 COMMANDS	2 (DI1,2)	1106 EXT REF2 SELECT	0 (KEYPAD)
1002 EXT 2 COMMANDS	0 (NOT SEL)	*1201 CONST SPEED SEL	3 (DI3)
1003 DIRECTION	3 (REQUEST)	1601 RUN ENABLE	0 (NOT SEL)
1102 EXT1/EXT2 SEL	6 (EXT1)	2105 PREMAGN SEL	0 (NOT SEL)
1103 EXT REF1 SELECT	1 (AI1)	2201 ACC/DEC 1/2 SEL	5 (DI5)

Application Macro Factory (1)

This macro is intended for applications where there is no control panel available. It provides a general purpose 3-wire I/O configuration.

The value of parameter 9902 is 0. DI 4 is connected.

Input signals
- Start, stop and direction (DI1,2,3)
- Analog reference (AI1)
- Ramp pair 1/2 selection (DI5)

Output signals
- An. output AO: Frequency
- Relay output 1: Fault
- Relay output 2: Running

DIP switch S1

S1:1:U

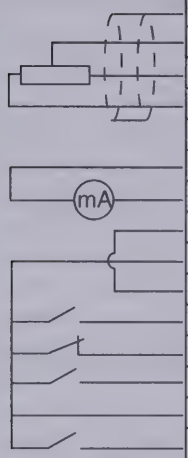

Control Terminals		Function
1	SCR	
2	AI 1	External reference1; 0...10 V <=> 0...60 Hz
3	AGND	
4	10 V	Reference voltage 10 VDC
5	AI 2	Not used
6	AGND	
7	AO	Output frequency 0...20 mA <=> 0...60 Hz
8	AGND	
9	+12 V	+12 VDC
10	DCOM	
11	DI 1	Momentary activation with DI2 activated: **Start**
12	DI 2	Momentary deactivation: **Stop**
13	DI 3	**Fwd/Rev**; Activate to reverse rotation direction
14	DI 4	**Has to be connected!***
15	DI 5	Ramp pair selection. Activate to select ramp pair 2. Defaults: 5 s (ramp pair 1), 60 s (ramp pair 2)
16	DO 1A	Relay output 1
17	DO 1B	**Fault:** open
18	DO 2A	Relay output 2
19	DO 2B	**Running:** closed

***Note!** DI 4 is used to configure the ACS 140. It is read only once, when power is connected. All parameters marked with * are determined by the DI4 input.

Note! Stop input (DI2) IS deactivated: panel START/STOP button is interlocked (local).

Factory (1) parameter values:

*1001 EXT 1 COMMANDS	4 (DI1P,2P,P)	1106 EXT REF2 SELECT	0 (KEYPAD)
1002 EXT 2 COMMANDS	0 (NOT SEL)	*1201 CONST SPEED SEL	0 (NOT SEL)
1003 DIRECTION	3 (REQUEST)	1601 RUN ENABLE	0 (NOT SEL)
1102 EXT1/EXT2 SEL	6 (EXT1)	2105 PREMAGN SEL	0 (NOT SEL)
1103 EXT REF1 SELECT	1 (AI1)	2201 ACC/DEC 1/2 SEL	5 (DI5)

Application Macro ABB Standard

This general purpose macro provides a general purpose 2-wire I/O configuration. It gives two more preset speeds compared to Factory Macro (0).

The value of parameter 9902 is 1.

Input signals
- Start, stop and direction (DI1,2)
- Analog reference (AI1)
- Preset speed selection (DI3,4)
- Ramp pair 1/2 selection (DI5)

Output signals
- An. output AO: Frequency
- Relay output 1: Fault
- Relay output 2: Running

DIP switch S1

S1:1:U

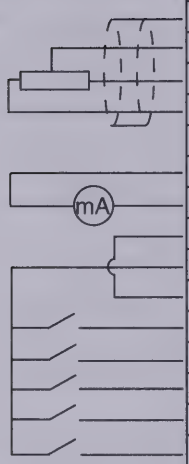

Control Terminals		Function
1	SCR	
2	AI 1	External reference1; 0...10 V <=> 0...60 Hz
3	AGND	
4	10 V	Reference voltage 10 VDC
5	AI 2	Not used
6	AGND	
7	AO	Output frequency 0...20 mA <=> 0...60 Hz
8	AGND	
9	+12 V	+12 VDC
10	DCOM	
11	DI 1	**Start/Stop:** Activate to start
12	DI 2	**Fwd/Rev**: Activate to reverse rotation direction
13	DI 3	Constant speed selection*
14	DI 4	Constant speed selection*
15	DI 5	Ramp pair selection. Activate to select ramp pair 2. Defaults: 5 s / 60 s (ramp pair 1/2)
16	DO 1A	Relay output 1
17	DO 1B	**Fault:** open
18	DO 2A	Relay output 2
19	DO 2B	**Running:** closed

*Constant speed selection: 0 = open, 1 = connected

DI3	DI4	Output
0	0	Reference through AI1
1	0	Const speed 1 (1202)
0	1	Const speed 2 (1203)
1	1	Const speed 3 (1204)

ABB Standard parameter values:

1001 EXT 1 COMMANDS	2 (DI1,2)	1106 EXT REF2 SELECT	0 (KEYPAD)
1002 EXT 2 COMMANDS	0 (NOT SEL)	1201 CONST SPEED SEL	7 (DI3,4)
1003 DIRECTION	3 (REQUEST)	1601 RUN ENABLE	0 (NOT SEL)
1102 EXT1/EXT2 SEL	6 (EXT1)	2105 PREMAGN SEL	0 (NOT SEL)
1103 EXT REF1 SELECT	1 (AI1)	2201 ACC/DEC 1/2 SEL	5 (DI5)

Application Macro 3-wire

This macro is intended for those applications where the drive is controlled using momentary push-buttons. It gives two more preset speeds compared to Factory Macro (1) by using DI4 and DI5.

The value of parameter 9902 is 2.

Input signals
- Start,stop and direction (DI1,2,3)
- Analog reference (AI1)
- Preset speed selection (DI4,5)

Output signals
- An. output AO: Frequency
- Relay output 1: Fault
- Relay output 2: Running

DIP switch S1

S1:1:U

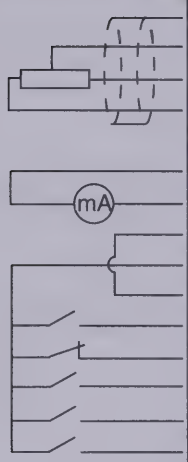

Control Terminals		Function
1	SCR	
2	AI 1	External reference1; 0...10 V <=> 0...60 Hz
3	AGND	
4	10 V	Reference voltage 10 VDC
5	AI 2	Not used
6	AGND	
7	AO	Output frequency 0...20 mA <=> 0...60 Hz
8	AGND	
9	+12 V	+12 VDC
10	DCOM	
11	DI 1	Momentary activation with DI2 activated: **Start**
12	DI 2	Momentary deactivation: **Stop**
13	DI 3	Activate to reverse rotation: **Fwd/Rev**
14	DI 4	Constant speed select*
15	DI 5	Constant speed select*
16	DO 1A	Relay output 1
17	DO 1B	**Fault:** open
18	DO 2A	Relay output 2
19	DO 2B	**Running:** closed

*Constant speed selection: 0 = open, 1 = connected

DI4	DI5	Output
0	0	Reference through AI1
1	0	Constant speed 1 (1202)
0	1	Constant speed 2 (1203)
1	1	Constant speed 3 (1204)

Note! Stop input (DI2) IS deactivated: panel START/STOP button is interlocked (local).

Application Macro 3-wire parameter values:

1001 EXT 1 COMMANDS	4 (DI1P,2P,3)	1106 EXT REF2 SELECT	0 (KEYPAD)
1002 EXT 2 COMMANDS	0 (NOT SEL)	1201 CONST SPEED SEL	8 (DI4,5)
1003 DIRECTION	3 (REQUEST)	1601 RUN ENABLE	0 (NOT SEL)
1102 EXT1/EXT2 SEL	6 (EXT1)	2105 PREMAGN SEL	0 (NOT SEL)
1103 EXT REF1 SELECT	1 (AI1)	2201 ACC/DEC 1/2 SEL	0 (NOT SEL)

Application Macro Alternate

This macro offers an I/O configuration that is adopted to a sequence of DI control signals used when alternating the direction of rotation of the drive.

The value of parameter 9902 is 3.

Input signals
- Start, stop and direction (DI1,2)
- Analog reference (AI1)
- Preset speed selection (DI3,4)
- Ramp pair 1/2 selection (DI5)

Output signals
- An. output AO: Frequency
- Relay output 1: Fault
- Relay output 2: Running

DIP switch S1

S1:1:U

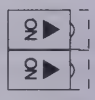

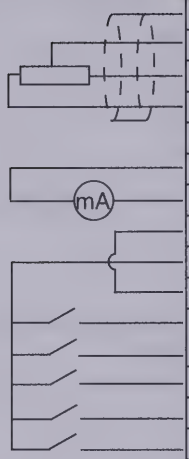

Control Terminals		Function
1	SCR	
2	AI 1	External reference1; 0...10 V <=> 0...60 Hz
3	AGND	
4	10 V	Reference voltage 10 VDC
5	AI 2	Not used
6	AGND	
7	AO	Output frequency 0...20 mA <=> 0...60 Hz
8	AGND	
9	+12 V	+12 VDC
10	DCOM	
11	DI 1	**Start fwd**; If DI1 state is the same as DI2, drive stops
12	DI 2	**Start reverse**
13	DI 3	Constant speed select*
14	DI 4	Constant speed select*
15	DI 5	Ramp pair selection. Activate to select ramp pair 2. Defaults: 5 s / 60 s (ramp pair 1/2)
16	DO 1A	Relay output 1
17	DO 1B	**Fault:** open
18	DO 2A	Relay output 2
19	DO 2B	**Running:** closed

*Constant speed selection: 0 = open, 1 = connected

DI3	DI4	Output
0	0	Reference through AI1
1	0	Constant speed 1 (1202)
0	1	Constant speed 2 (1203)
1	1	Constant speed 3 (1204)

Application macro Alternate parameter values:

1001 EXT 1 COMMANDS	9 (DI1F,2R)	1106 EXT REF2 SELECT	0 (KEYPAD)
1002 EXT 2 COMMANDS	0 (NOT SEL)	1201 CONST SPEED SEL	7 (DI3,4)
1003 DIRECTION	3 (REQUEST)	1601 RUN ENABLE	0 (NOT SEL)
1102 EXT1/EXT2 SEL	6 (EXT1)	2105 PREMAGN SEL	0 (NOT SEL)
1103 EXT REF1 SELECT	1 (AI1)	2201 ACC/DEC 1/2 SEL	5 (DI5)

Application Macro Motor Potentiometer

This macro provides a cost-effective interface for PLCs that vary the speed of the drive using only digital signals.

The value of parameter 9902 is 4.

Input signals
- Start, stop and direction (DI1,2)
- Reference up (DI3)
- Reference down (DI4)
- Preset speed selection (DI5)

Output signals
- An. output AO: Frequency
- Relay output 1: Fault
- Relay output 2: Running

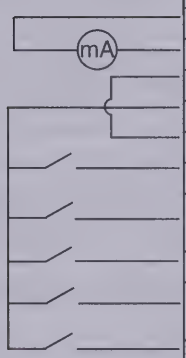

Control Terminals		Function
1	SCR	
2	AI 1	Not used
3	AGND	
4	10 V	Reference voltage 10 VDC
5	AI 2	Not used
6	AGND	
7	AO	Output frequency 0...20 mA <=> 0...60 Hz
8	AGND	
9	+12 V	+12 VDC
10	DCOM	
11	DI 1	**Start/Stop**: Activate to start ACS 140
12	DI 2	**Forward/Reverse**: Activate to reverse rotation direction
13	DI 3	**Reference up**: Activate to increase reference*
14	DI 4	**Reference down**: Activate to decrease reference*
15	DI 5	Constant speed 1
16	DO 1A	Relay output 1
17	DO 1B	**Fault:** open
18	DO 2A	Relay output 2
19	DO 2B	**Running:** closed

***Note!**
- If both DI 3 and DI 4 are active or inactive, the reference is kept stable.
- Reference is stored during stop or power down condition.
- Analog reference is not followed when motor potentiometer is selected.

Motor potentiometer parameter values:

1001 EXT 1 COMMANDS	2 (DI1,2)	1106 EXT REF2 SELECT	0 (KEYPAD)
1002 EXT 2 COMMANDS	0 (NOT SEL)	1201 CONST SPEED SEL	5 (DI5)
1003 DIRECTION	3 (REQUEST)	1601 RUN ENABLE	0 (NOT SEL)
1102 EXT1/EXT2 SEL	6 (EXT1)	2105 PREMAGN SEL	0 (NOT SEL)
1103 EXT REF1 SELECT	6 (DI3U,4D)	2201 ACC/DEC 1/2 SEL	0 (NOT SEL)

Application Macro Hand - Auto

This macro offers an I/O configuration that is typically used in pump and fan applications.

The value of parameter 9902 is 5.

Input signals
- Start/stop(DI1,5) and rev (DI2,4)
- Two an. references (AI1,AI2)
- Control location selection (DI3)

Output signals
- An. output AO: Frequency
- Relay output 1: Fault
- Relay output 2: Running

DIP switch S1

S1:1:U
S1:2: I

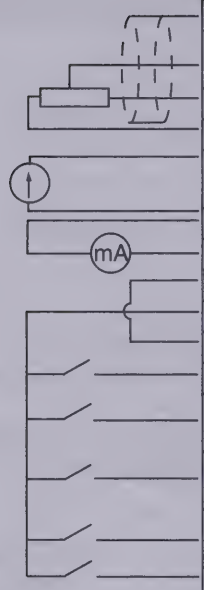

Control Terminals		Function
1	SCR	
2	AI 1	External reference 1: 0...10 V <=> 0...60 Hz (**Hand Control**)
3	AGND	
4	10 V	Reference voltage 10 VDC
5	AI 2	External reference 2: 0...20 mA <=> 0...60 Hz (**Auto Control**)
6	AGND	
7	AO	Output frequency 0...20 mA <=> 0...60 Hz
8	AGND	
9	+12 V	+12 VDC
10	DCOM	
11	DI 1	**Start/Stop**: Activate to start ACS 140 (**Hand**)
12	DI 2	**Forward/Reverse**: Activate to reverse rotation direction (**Hand**)
13	DI 3	**EXT1/EXT2 Select**: Activate to select Auto Control
14	DI 4	**Forward/Reverse**: Activate to reverse rotation direction (**Auto**)
15	DI 5	**Start/Stop**: Activate to start ACS 140 (**Auto**)
16	DO 1A	Relay output 1
17	DO 1B	**Fault:** open
18	DO 2A	Relay output 2
19	DO 2B	**Running:** closed

Note! Parameter 2107 START INHIBIT should be 0 (OFF).

Hand-Auto parameter values:

1001 EXT 1 COMMANDS	2 (DI1,2)	1106 EXT REF2 SELECT	2 (AI2)
1002 EXT 2 COMMANDS	7 (DI5,4)	1201 CONST SPEED SEL	0 (NOT SEL)
1003 DIRECTION	3 (REQUEST)	1601 RUN ENABLE	0 (NOT SEL)
1102 EXT1/EXT2 SEL	3 (DI3)	2105 PREMAGN SEL	0 (NOT SEL)
1103 EXT REF1 SELECT	1 (AI1)	2201 ACC/DEC 1/2 SEL	0 (NOT SEL)

Application Macro PID Control

This macro is intended for use with different closed-loop control systems such as pressure control, flow control, etc.

The value of parameter 9902 is 6.

Input signals
- Start/stop (DI1,5)
- Analog reference (AI1)
- Actual value (AI2)
- Control location selection (DI2)
- Constant speed (DI3)
- Run enable (DI4)

Output signals
- An. output AO: Frequency
- Relay output 1: Fault
- Relay output 2: Running

DIP switch S1

S1:1:U
S1:2: I

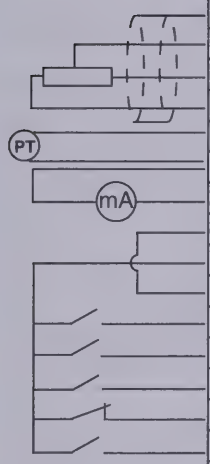

Control Terminals		Function
1	SCR	
2	AI 1	EXT1 (**Manual**) or EXT2 (**PID**) reference; 0...10 V
3	AGND	
4	10 V	Reference voltage 10 VDC
5	AI 2	Actual signal; 0...20 mA (**PID**)
6	AGND	
7	AO	Output frequency 0...20 mA <=> 0...60 Hz
8	AGND	
9	+12 V	+12 VDC
10	DCOM	
11	DI 1	**Start/Stop**: Activate to start ACS 140 (**Manual**)
12	DI 2	**EXT1/EXT2 select**: Activate to select PID control*
13	DI 3	**Constant speed 1**; not used if PID control**
14	DI 4	**Run enable**: deactivation always stops ACS 140
15	DI 5	**Start/Stop**: Activate to start ACS 140 (**PID**)
16	DO 1A	Relay output 1
17	DO 1B	**Fault:** open
18	DO 2A	Relay output 2
19	DO 2B	**Running:** closed

Note!
* Critical frequencies (group 25) are ignored while in PID control (PID).
** Constant speed is not considered while in PID control (PID).
Note! The Parameter 2107 START INHIBIT should be 0 (OFF).

PID control parameters (group 40) are not displayed in the Basic parameter set.

PID Control parameter values:

1001 EXT 1 COMMANDS	1 (DI1)	1106 EXT REF2 SELECT	1 (AI1)
1002 EXT 2 COMMANDS	6 (DI5)	1201 CONST SPEED SEL	3 (DI3)
1003 DIRECTION	1 (FORWARD)	1601 RUN ENABLE	4 (DI4)
1102 EXT1/EXT2 SEL	2 (DI2)	2105 PREMAGN SEL	0 (NOT SEL)
1103 EXT REF1 SELECT	1 (AI1)	2201 ACC/DEC 1/2 SEL	0 (NOT SEL)

Application Macro Premagnetize

This macro is intended for those applications where the drive must start very quickly. Building up the flux in the motor always takes time. With the Premagnetize Macro, this delay can be eliminated.

The value of parameter 9902 is 7.

Input signals
- Start, stop and direction (DI1,2)
- Analog reference (AI1)
- Preset speed selection (DI3,4)
- Premagnetize (DI5)

Output signals
- An. output AO: Frequency
- Relay output 1: Fault
- Relay output 2: Running

DIP switch S1

S1:1:U

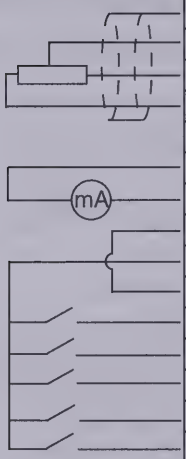

Control Terminals		Function
1	SCR	
2	AI 1	External reference1: 0...10 V <=> 0...60 Hz
3	AGND	
4	10 V	Reference voltage 10 VDC
5	AI 2	Not used
6	AGND	
7	AO	Output frequency 0...20 mA <=> 0...60 Hz
8	AGND	
9	+12 V	+12 VDC
10	DCOM	
11	DI 1	**Start/Stop**: Activate to start ACS 140
12	DI 2	**Fwd/Rev**: Activate to reverse rotation direction
13	DI 3	Constant speed select*
14	DI 4	Constant speed select*
15	DI 5	Premagnetize: Activate to start premagnetizing
16	DO 1A	Relay output 1
17	DO 1B	**Fault:** open
18	DO 2A	Relay output 2
19	DO 2B	**Running:** closed

*Constant speed selection: 0 = open, 1 = connected

DI3	DI4	Output
0	0	Reference through AI1
1	0	Constant speed 1 (1202)
0	1	Constant speed 2 (1203)
1	1	Constant speed 3 (1204)

Premagnetize parameter values:

1001 EXT 1 COMMANDS	2 (DI1,2)	1106 EXT REF2 SELECT	0 (KEYPAD)
1002 EXT 2 COMMANDS	0 (NOT SEL)	1201 CONST SPEED SEL	7 (DI3,4)
1003 DIRECTION	3 (REQUEST)	1601 RUN ENABLE	0 (NOT SEL)
1102 EXT1/EXT2 SEL	6 (EXT1)	2105 PREMAGN SEL	5 (DI5)
1103 EXT REF1 SELECT	1 (KEYPAD)	2201 ACC/DEC 1/2 SEL	0 (NOT SEL)

ACS 140 Complete Parameter List

Initially, only the basic parameters (shaded grey in Table 1) are visible. Use the appropriate menu function to make the FULL parameter set visible.

S = Parameters can be modified only when the drive is stopped.

M = Default value depends on the selected macro (*).

Table 1 Full parameter set.

Code	Name	Range	Resolution	Default	User	S	M
Group 99 START-UP DATA							
9902	APPLIC MACRO	0-7	1	0 (FACTORY)		✓	
9905	MOTOR NOM VOLT	200, 208,220, 230, 240,380, 400, 415,440, 460, 480 V	1 V	230/460 V		✓	
9906	MOTOR NOM CURR	$0.5*I_N$ - $1.5*I_N$	0.1 A	I_N		✓	
9907	MOTOR NOM FREQ	0-300 Hz	1 Hz	60 Hz		✓	
9908	MOTOR NOM SPEED	0-3600 rpm	1 rpm	1750 rpm		✓	
Group 01 OPERATING DATA							
0102	SPEED	0-9999 rpm	1 rpm	-			
0103	OUTPUT FREQ	0-300 Hz	0.1 Hz	-			
0104	CURRENT	-	0.1 A	-			
0105	TORQUE	-100 - 100 %	0.1 %	-			
0106	POWER	-	0.1 kW	-			
0107	DC BUS VOLTAGE	0-679 V	0.1 V	-			
0109	OUTPUT VOLTAGE	0-480 V	0.1 V	-			
0110	ACS 140 TEMP	0-150 °C	0.1 °C	-			
0111	EXT REF 1	0-300 Hz	0.1 Hz	-			
0112	EXT REF 2	0-100 %	0.1 %	-			
0113	CTRL LOCATION	0-2	1	-			
0114	RUN TIME	0-99.99 kh	0.01 kh	-			
0115	kWh COUNTER	0-9999 kWh	1 kWh	-			
0116	APPL BLK OUTPUT	0-100 %	0.1 %	-			
0117	DI1-DI4 STATUS	0000-1111 (0-15 decimal)	1	-			
0118	AI1	0-100 %	0.1 %	-			
0119	AI2	0-100 %	0.1 %	-			
0121	DI5 & RELAYS	0000-0111 (0-7 decimal)	1	-			
0122	AO	0-20 mA	0.1 mA	-			
0124	ACTUAL VALUE 1	0-100 %	0.1 %	-			
0125	ACTUAL VALUE 2	0-100 %	0.1 %	-			
0126	CONTROL DEV	-100-100 %	0.1 %	-			
0127	ACTUAL VALUE	-100-100 %	0.1 %	-			
0128	LAST FAULT	0-22	1	0			
0129	PREVIOUS FAULT	0-22	1	0			
0130	OLDEST FAULT	0-22	1	0			

Code	Name	Range	Resolution	Default	User	S	M
Group 10 COMMAND INPUTS							
1001	EXT1 COMMANDS	0-10	1	2/4		✓	✓
1002	EXT2 COMMANDS	0-10	1	0 (NOT SEL)		✓	✓
1003	DIRECTION	1-3	1	3 (REQUEST)		✓	✓
Group 11 REFERENCE SELECT							
1101	KEYPAD REF SEL	1-2	1	1 (REF1(Hz))			
1102	EXT1/EXT2 SEL	1-8	1	6 (EXT1)		✓	✓
1103	EXT REF1 SELECT	0-11	1	1 (AI1)		✓	✓
1104	EXT REF1 MIN	0-300 Hz	1 Hz	0 Hz			
1105	EXT REF1 MAX	0-300 Hz	1 Hz	60 Hz			
1106	EXT REF2 SELECT	0-11	1	0 (KEYPAD)		✓	✓
1107	EXT REF2 MIN	0-100 %	1 %	0 %			
1108	EXT REF2 MAX	0-500 %	1 %	100 %			
Group 12 CONSTANT SPEEDS							
1201	CONST SPEED SEL	0-10	1	3/0		✓	✓
1202	CONST SPEED 1	0-300 Hz	0.1 Hz	5 Hz			
1203	CONST SPEED 2	0-300 Hz	0.1 Hz	10 Hz			
1204	CONST SPEED 3	0-300 Hz	0.1 Hz	15 Hz			
1205	CONST SPEED 4	0-300 Hz	0.1 Hz	20 Hz			
1206	CONST SPEED 5	0-300 Hz	0.1 Hz	25 Hz			
1207	CONST SPEED 6	0-300 Hz	0.1 Hz	40 Hz			
1208	CONST SPEED 7	0-300 Hz	0.1 Hz	50 Hz			
Group 13 ANALOG INPUTS							
1301	MINIMUM AI1	0-100 %	1 %	0 %			
1302	MAXIMUM AI1	0-100 %	1 %	100 %			
1303	FILTER AI1	0-10 s	0.1 s	0.1 s			
1304	MINIMUM AI2	0-100 %	1 %	0 %			
1305	MAXIMUM AI2	0-100 %	1 %	100 %			
1306	FILTER AI2	0-10 s	0.1 s	0.1 s			
Group 14 RELAY OUTPUTS							
1401	RELAY OUTPUT 1	0-11	1	3 (FAULT (-1))			
1402	RELAY OUTPUT 2	0-11	1	2 (RUN)			
Group 15 ANALOG OUTPUT							
1501	AO CONTENT	102-130	1	103			
1502	AO CONTENT MIN	*	*	0.0 Hz			
1503	AO CONTENT MAX	*	*	60 Hz			
1504	MINIMUM AO	0.0-20.0 mA	0.1 mA	0 mA			
1505	MAXIMUM AO	0.0-20.0 mA	0.1 mA	20 mA			
1506	FILTER AO	0-10 s	0.1 s	0.1 s			

Code	Name	Range	Resolution	Default	User	S	M
Group 16 SYSTEM CONTROLS							
1601	RUN ENABLE	0-6	1	0 (NOT SEL)		✓	✓
1602	PARAMETER LOCK	0-2	1	1 (OPEN)			
1604	FAULT RESET SEL	0-7	1	6 (START/ STOP)		✓	
1608	DISPLAY ALARMS	0-1	1	0 (NO)			
Group 20 LIMITS							
2003	MAX CURRENT	$0.5*I_N$ - $1.5*I_N$	0.1 A	$1.5*I_N$			
2005	OVERVOLT CTRL	0-1	1	1 (ENABLE)			
2006	UNDERVOLT CTRL	0-2	1	1 (ENABLE TIME)			
2007	MINIMUM FREQ	0-300 Hz	1 Hz	0 Hz			
2008	MAXIMUM FREQ	0-300 Hz	1 Hz	60 Hz		✓	
Group 21 START/STOP							
2101	START FUNCTION	1-4	1	1 (RAMP)		✓	
2102	STOP FUNCTION	1-2	1	1 (COAST)			
2103	TORQ BOOST CURR	$0.5*I_N$ - $2.0*I_N$	0.1 A	$1.2*I_N$		✓	
2104	STOP DC INJ TIME	0-250 s	0.1 s	0 s			
2105	PREMAGN SEL	0-6	1	0 (NOT SEL)		✓	✓
2106	PREMAGN MAX TIME	0-25.0 s	0.1 s	2.0 s			
2107	START INHIBIT	0-1	1	1 (ON)			
Group 22 ACCEL/DECEL							
2201	ACC/DEC 1/2 SEL	0-5	1	5 (DI5)		✓	✓
2202	ACCELER TIME 1	0.1-1800 s	0.1; 1 s	5 s			
2203	DECELER TIME 1	0.1-1800 s	0.1; 1 s	5 s			
2204	ACCELER TIME 2	0.1-1800 s	0.1; 1 s	60 s			
2205	DECELER TIME 2	0.1-1800 s	0.1; 1 s	60 s			
2206	RAMP SHAPE	0-3	1	0 (LINEAR)			
Group 25 CRITICAL FREQ							
2501	CRIT FREQ SEL	0-1	1	0 (OFF)			
2502	CRIT FREQ 1 LO	0-300 Hz	1 Hz	0 Hz			
2503	CRIT FREQ 1 HI	0-300 Hz	1 Hz	0 Hz			
2504	CRIT FREQ 2 LO	0-300 Hz	1 Hz	0 Hz			
2505	CRIT FREQ 2 HI	0-300 Hz	1 Hz	0 Hz			
Group 26 MOTOR CONTROL							
2603	IR COMPENSATION	0-30 V FOR 200 V UNITS; 0-60 V FOR 400 V UNITS	1	10 V			
2604	IR COMP RANGE	0-300 Hz	1 Hz	60 Hz			

Code	Name	Range	Resolution	Default	User	S	M
2605	LOW NOISE	0-2	1	0 (STANDARD)		✓	
2606	U/f RATIO	1-2	1	1 (LINEAR)		✓	
2607	SLIP COMP RATIO	0-250 %	1 %	0 %			
Group 30 FAULT FUNCTIONS							
3001	AI<MIN FUNCTION	0-3	1	1 (FAULT)			
3002	PANEL LOSS	1-3	1	1 (FAULT)			
3003	EXTERNAL FAULT	0-5	1	0 (NOT SEL)			
3004	MOT THERM PROT	0-2	1	1 (FAULT)			
3005	MOT THERM TIME	256-9999 s	1 s	500 s			
3006	MOT LOAD CURVE	50-150 %	1 %	100 %			
3007	ZERO SPEED LOAD	25-150 %	1 %	70 %			
3008	BREAK POINT	1-300 Hz	1 Hz	35 Hz			
3009	STALL FUNCTION	0-2	1	0 (NOT SEL)			
3010	STALL CURRENT	$0.5*I_N$ - $1.5*I_N$	0.1 A	$1.2*I_N$			
3011	STALL FREQ HI	0.5-50 Hz	0.1 Hz	20 Hz			
3012	STALL TIME	10-400 s	1 s	20 s			
3013	AI1 FAULT LIMIT	0-100 %	1 %	0 %			
3014	AI2 FAULT LIMIT	0-100 %	1 %	0 %			
Group 31 AUTOMATIC RESET							
3101	NR OF TRIALS	0-5	1	0			
3102	TRIAL TIME	1.0-180.0 s	0.1 s	30 s			
3103	DELAY TIME	0.0-3.0 s	0.1 s	0 s			
3104	AR OVERCURRENT	0-1	1	0 (DISABLE)			
3105	AR OVERVOLTAGE	0-1	1	0 (DISABLE)			
3106	AR UNDERVOLTAGE	0-1	1	0 (DISABLE)			
3107	AR AI<MIN	0-1	1	0 (DISABLE)			
Group 32 SUPERVISION							
3201	SUPERV 1 PARAM	102 -130	1	103			
3202	SUPERV 1 LIM LO	*	*	0			
3203	SUPERV 1 LIM HI	*	*	0			
3204	SUPERV 2 PARAM	102 - 130	1	103			
3205	SUPERV 2 LIM LO	*	*	0			
3206	SUPERV 2 LIM HI	*	*	0			
Group 33 INFORMATION							
3301	SW VERSION	0.0.0.0-f.f.f.f	-	-			
3302	TEST DATE	yy.ww	-	-			
Group 40 PID-CONTROL							
4001	PID GAIN	0.1-100	0.1	1.0			
4002	PID INTEG TIME	0.1-320 s	0.1 s	60 s			

Code	Name	Range	Resolution	Default	User	S	M
4003	PID DERIV TIME	0-10 s	0.1 s	0 s			
4004	PID DERIV FILTER	0-10 s	0.1 s	1 s			
4005	ERROR VALUE INV	0-1	1	0 (NO)			
4006	ACTUAL VAL SEL	1-9	1	1 (ACT1)		✓	
4007	ACT1 INPUT SEL	1-2	1	2 (AI2)		✓	
4008	ACT2 INPUT SEL	1-2	1	2 (AI2)		✓	
4009	ACT1 MINIMUM	0-1000 %	1 %	0 %			
4010	ACT1 MAXIMUM	0-1000 %	1 %	100 %			
4011	ACT2 MINIMUM	0-1000 %	1 %	0 %			
4012	ACT2 MAXIMUM	0-1000 %	1 %	100 %			
4013	PID SLEEP DELAY	0.0-3600 s	0.1; 1 s	60 s			
4014	PID SLEEP LEVEL	0.0-120 Hz	0.1 Hz	0 Hz			
4015	WAKE-UP LEVEL	0.0-100 %	0.1 %	0 %			
4019	SET POINT SEL	1-2	1	2 (EXTERNAL)			
4020	INTERNAL SETPNT1	0.0-100.0 %	0.1 %	40 %			
4021	INTERNAL SETPNT2	0.0-100.0 %	0.1 %	80 %			
4022	INTERNAL SETPNT SEL	1-7	1	6 (SETPNT1)			
Group 52 SERIAL COMM							
For descriptions of parameters in this group, refer to *ACS 140 RS485 and RS232 Adapter Installation and Start-up Guide.*							

Basic parameters.

Group 99: Start-up Data

The Start-up Data parameters are a special set of parameters for setting up the ACS 140 and for entering motor information.

Code	Description
9902	**APPLIC MACRO** Application macro selection. This parameter is used to select the Application Macro which will configure the ACS 140 for a particular application. Refer to "Application Macros" on page 27, for a list and description of available Application Macros.
9905	**MOTOR NOM VOLT** Nominal motor voltage from motor rating plate. This parameter sets the maximum output voltage supplied to the motor by the ACS 140. MOTOR NOM FREQ sets the frequency at which the output voltage is equal to the MOTOR NOM VOLT. The ACS 140 cannot supply the motor with a voltage greater than the input voltage. See Figure 1.
9906	**MOTOR NOM CURR** Nominal motor current from rating plate. The allowed range is $0.5 \cdot I_N$ ... $1.5 \cdot I_N$ of ACS 140.
9907	**MOTOR NOM FREQ** Nominal motor frequency from rating plate (field weakening point). See Figure 1.
9908	**MOTOR NOM SPEED** Nominal motor speed from rating plate.

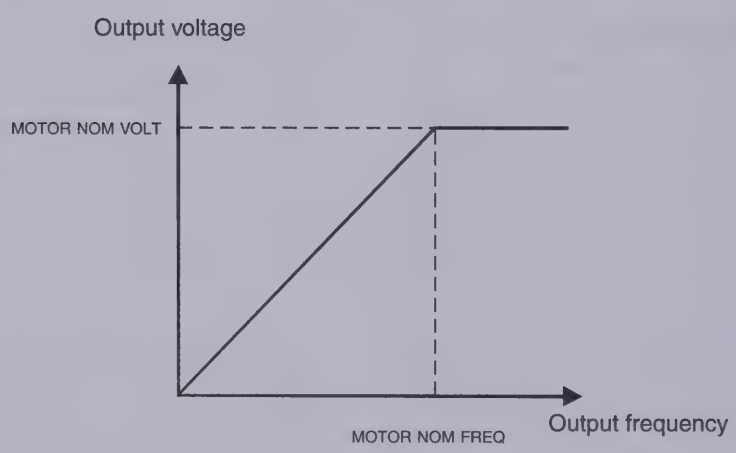

Figure 1 Output voltage as a function of output frequency.

Group 01: Operating Data

This group contains drive operating data, including actual signals and fault memories. Actual signal values are measured or calculated by the drive and they cannot be set by the user. Fault memories can be cleared by the user from the control panel.

Code	Description
0102	**SPEED** Displays the calculated speed of the motor (rpm).
0103	**OUTPUT FREQ** Displays the frequency (Hz) applied to the motor. (Also shown in OUTPUT display.)
0104	**CURRENT** Displays the motor current, as measured by the ACS 140. (The same value that is shown by the OUTPUT display mode.)
0105	**TORQUE** Output torque. Calculated value of torque on the motor shaft in % of motor nominal torque.
0106	**POWER** Displays the measured motor power in kW. **Note!** ACS100-PAN will not display the unit ("kW").
0107	**DC BUS VOLTAGE** Displays the DC bus voltage, as measured by the ACS 140. The voltage is displayed in Volts DC.
0109	**OUTPUT VOLTAGE** Displays the voltage applied to the motor.
0110	**ACS 140 TEMP** Displays the temperature of the ACS 140 heatsink in degrees centigrade.
0111	**EXT REF 1** The value of external reference 1 in Hz.
0112	**EXT REF 2** The value of external reference 2 in %.
0113	**CTRL LOCATION** Displays the active control location. Alternatives are: 0 = LOCAL 1 = EXT1 2 = EXT2 See "APPENDIX A" on page 85 for description of different control locations.
0114	**RUN TIME (R)** Shows the total running time of the ACS 140 in thousands of hours (Kh). Can be reset by pressing the UP and Down buttons simultaneously when in parameter set mode.
0115	**kWh COUNTER (R)** Counts the kilowatt hours of ACS 140 in operation. Can be reset by pressing the UP and Down buttons simultaneously when in parameter set mode.
0116	**APPL BLK OUTPUT** The reference value in percent received from the application block. The value is from PID control, depending upon the selected macro. Otherwise the value is from parameter 0112 EXT REF 2.

Code	Description
0117	**DI1-DI4 STATUS** Status of the four digital inputs. Status is displayed as a binary number. If the input is activated, the display will indicate 1. If the inputis deactivated, it will display a 0.
0118	**AI1** Relative value of analog Input 1 displayed in %.
0119	**AI2** Relative value of analog input 2 displayed in %.
0121	**DI5 & RELAYS** Status of digital input 5 and relay outputs. 1 indicates that the relay is energized and 0 indicates that the relay is de-energized. 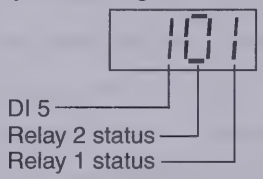
0122	**AO** Value of analog output signal in milliamperes.
0124	**ACTUAL VALUE 1** PID Controller actual value 1 (ACT1), displayed in percent (%).
0125	**ACTUAL VALUE 2** PID Controller actual value 2 (ACT2), displayed in percent (%).
0126	**CONTROL DEV** Displays the difference between the reference value and the actual value of the PID process controller, displayed in percent (%).
0127	**ACTUAL VALUE** Feedback signal (actual value) for PID controller, displayed in percent (%).
0128	**LAST FAULT** Last recorded fault (0=no fault). See “Diagnostics” on page 75. Can be cleared with the control panel by pressing the UP and DOWN buttons simultaneously when in parameter set mode.
0129	**PREVIOUS FAULT** Previous recorded fault. See “Diagnostics” on page 75. Can be cleared with the control panel by pressing the UP and DOWN buttons simultaneously when in parameter set mode.
0130	**OLDEST FAULT** Oldest recorded fault. See “Diagnostics” on page 75. Can be cleared with the control panel by pressing the UP and DOWN buttons simultaneously when in parameter set mode.

Group 10: Command Inputs

Start, Stop and Direction commands can be given from the control panel or from two external locations (EXT1, EXT2). The selection between the two external locations is made with parameter 1102 EXT1/EXT2 SEL. For more information on control locations refer to "APPENDIX A" on page 85..

Code	Description
1001	**EXT1 COMMANDS** Defines the connections and the source of Start/Stop/Direction commands for External control location 1 (EXT1). 0 = NOT SEL No Start/Stop/Direction command source for EXT1 is selected. 1 = DI1 Two-wire Start/Stop connected to digital input DI1. DI1 deactivated = Stop; DI1 activated = Start. * 2 = DI1,2 Two-wire Start/Stop, Direction. Start/Stop is connected to digital input DI1 as above. Direction is connected to digital input DI2. DI2 deactivated = Forward; DI2 activated = Reverse. To control direction, the value of parameter 1003 DIRECTION should be REQUEST. 3 = DI1P,2P Three-wire Start/Stop. Start/Stop commands are given by means of momentary push-buttons (the P stands for "pulse"). The Start push-button is normally open, and connected to digital input DI1. The Stop push-button is normally closed, and connected to digital input DI2. Multiple Start push-buttons are connected in parallel; multiple Stop push-buttons are connected in series. *,** 4 = DI1P,2P,3 Three-wire Start/Stop, Direction. Start/Stop connected as with DI1P,2P. Direction is connected to digital input DI3. DI3 deactivated = Forward; DI3 activated = Reverse. To control Direction, the value of parameter 1003 DIRECTION should be REQUEST. ** 5 = DI1P,2P,3P Start Forward, Start Reverse, and Stop. Start and Direction commands are given simultaneously with two separate momentary push-buttons (the P stands for "pulse"). The Stop push-button is normally closed, and connected to digital input DI3. The Start Forward and Start Reverse push-buttons are normally open, and connected to digital inputs DI1 and DI2 respectively. Multiple Start push-buttons are connected in parallel, and multiple Stop push-buttons are connected in series. To control direction, the value of parameter 1003 DIRECTION should be REQUEST. ** 6 = DI5 Two-wire Start/Stop, connected to digital input DI5. DI5 deactivated = Stop and DI5 activated = Start. * 7 = DI5,4 Two-wire Start/Stop/Direction. Start/Stop is connected to digital input DI5. Direction is connected to digital input DI4. DI4 deactivated = Forward and DI4 activated = Reverse. To control direction, the value of parameter 1003 DIRECTION should be REQUEST. 8 = KEYPAD The Start/Stop and Direction commands are given from the control panel when External control location 1 is active. To control direction, the value of parameter 1003 DIRECTION should be REQUEST. 9 = DI1F,2R Start forward command is given when DI1 is activated and DI2 is deactivated. Start reverse command is given if DI1 is deactivated and DI2 is activated. In other cases Stop command is given. 10 = COMM The Start/Stop and Direction commands are given through serial communication. ***Note!** In cases 1,3,6 direction is set with parameter 1003 DIRECTION. Selecting value 3 (REQUEST) fixes the direction to Forward. ****Note!** Stop signal must be activated before Start command can be given.

1002	**EXT2 COMMANDS** Defines the connections and the source of Start, Stop and Direction commands for external control location 2 (EXT2). Refer to parameter 1001 EXT1 COMMANDS above.
1003	**DIRECTION** 1 = FORWARD 2 = REVERSE 3 = REQUEST Rotation direction lock. This parameter allows you to fix the motor's direction of rotation to forward or reverse. If you select 3 (REQUEST), the direction is set according to the given direction command.

Group 11: Reference Select

Reference commands can be given from the control panel or from two external locations. The selection between the two external locations is made with parameter 1102 EXT1/EXT2 SEL. For more information on control locations, refer to “APPENDIX A” on page 85.

Code	Description
1101	**KEYPAD REF SEL** Selection of active control panel reference in local control mode. 1 = REF1 (Hz) Control panel reference is given in Hz. 2 = REF2 (%) Control panel reference is given as a percentage (%).
1102	**EXT1/EXT2 SEL** Sets the input used for selecting the external control location, or fixes it to EXT1 or EXT2. The external control location of both Start/Stop/Direction commands and reference is determined by this parameter. 1...5 = DI1...DI5 External control location 1 or 2 is selected according to the state of the selected digital input (DI1 ... DI5), where deactivated = EXT1 and activated = EXT2. 6 = EXT1 External control location 1 (EXT1) is selected. The control signal sources for EXT1 are defined with parameter 1001 (Start/Stop/Direction commands) and parameter 1103 (reference). 7 = EXT2 External control location 2 (EXT2) is selected. The control signal sources for EXT2 are defined with parameter 1002 (Start/Stop/Direction commands) and parameter 1106 (reference). 8 = COMM External control location 1 or 2 is chosen through serial communication.

1103	**EXT REF1 SELECT** This parameter selects the signal source of external reference 1. 0 = KEYPAD Reference is given from the control panel. 1 = AI 1 Reference is given through analog input 1. 2 = AI 2 Reference is given through analog input 2. 3 = AI1/JOYST; 4 = AI2/JOYST Reference is given through analog input 1 (or 2 accordingly) configured for a joystick. The minimum input signal runs the drive at maximum reference in the reverse direction. The maximum input signal runs the drive at maximum reference in the forward direction (See Figure 2). See also parameter 1003 DIRECTION. **Caution:** Minimum reference for joystick should be 0.3 V (0.6 mA) or higher. If a 0 ... 10 V signal is used, the ACS 140 will operate at maximum reference in the reverse direction if the control signal is lost. Set parameter 3013 AI1 FAULT LIMIT or 3014 AI2 FAULT LIMIT to a value 3 % or higher, and parameter 3001 AI<MIN FUNCTION to 1 (FAULT), and the ACS 140 will stop in case the control signal is lost. 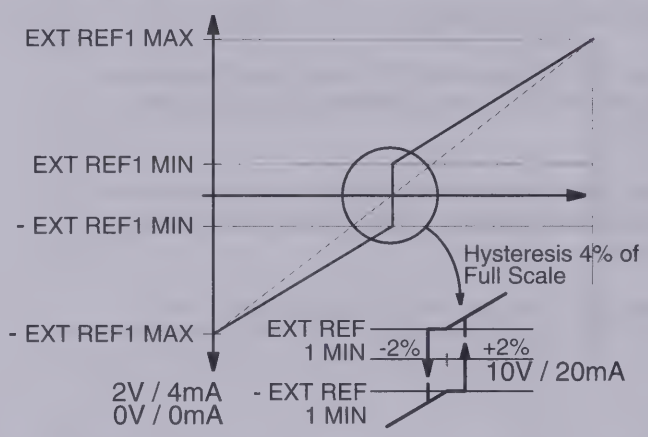 *Figure 2 Joystick control. Maximum for external reference 1 is set with Parameter 1105 and minimum with Parameter 1104.* 5 = DI3U,4D(R) Speed reference is given through digital inputs as motor potentiometer control. Digital input DI3 increases the speed (the U stands for "up"), and digital input DI4 decreases the speed (the D stands for "down"). (R) indicates that the reference will be reset to zero when a Stop command is given. The rate of change of the reference signal is controlled by parameter 2204 ACCELER TIME 2. 6 = DI3U,4D Same as above, except that the speed reference is not reset to zero on a Stop command. When the ACS 140 is started, the motor will ramp up at the selected acceleration rate to the stored reference. 7 = DI4U,5D Same as above, except that the digital inputs in use are DI4 and DI5. 8= COMM The reference is given through serial communication. 9 = DI3U,4D(R,NC); 10 = DI3U,4D(NC); 11 = DI4U,5D(NC) Selections 9,10,11 are the same as selections 5,6,7 respectively, with the exception that the reference value is not copied when: • moving from EXT1 to EXT 2, or • moving from EXT2 to EXT1, or • moving from local to remote.

1104	**EXT REF1 MIN** Sets the minimum frequency reference for external reference 1 in Hz. When the analog input signal is at minimum, external reference 1 is equal to EXT REF1 MIN. See Figure 3 on page 49.
1105	**EXT REF1 MAX** Sets the maximum frequency reference for external reference 1 in Hz. When analog input signal is at maximum, external reference 1 equals to EXT REF1 MAX. See Figure 3 on page 49.
1106	**EXT REF2 SELECT** This parameter selects the signal source for external reference 2. The alternatives are the same as with external reference 1, see parameter 1103 EXT REF1 SELECT.
1107	**EXT REF2 MIN** Sets the minimum reference in %. When the analog input signal is at minimum value, external reference 2 is equal to EXT REF2 MIN. See Figure 3 on page 49. • If the PID Control macro is selected, this parameter sets the minimum process reference. • If any macro other than PID is selected, this parameter sets the minimum frequency reference. This value is given as a percentage of the maximum frequency.
1108	**EXT REF2 MAX** Sets the maximum reference in %. When the analog input signal is at maximum value, external reference 2 is equal to EXT REF2 MAX. See Figure 3 on page 49. • If the PID Control macro is selected, this parameter sets the maximum process reference. • If any macro other than PID Control is selected, this parameter sets the maximum frequency reference. This value is given as a percentage of the maximum frequency.

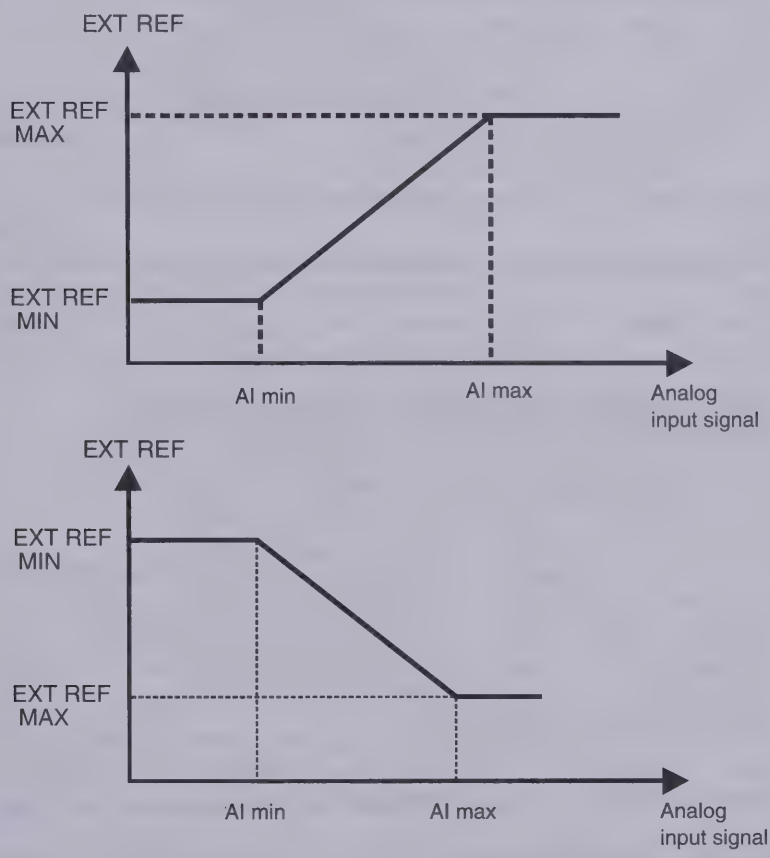

Figure 3 Setting EXT REF MINIMUM and EXT REF MAXIMUM. The range of the analog input signal is set by parameters 1301 and 1302 or parameters 1304 and 1305, depending on the analog input used.

Group 12: Constant Speeds

The ACS 140 has 7 programmable constant speeds, ranging from 0 to 300 Hz. Negative speed values cannot be given for constant speeds.
Constant speed selections are ignored if the process PID reference is followed (see PID Control Macro) or if the drive is in Local control mode.

Note! Parameter 1208 CONST SPEED 7 acts also as a 'fault speed' which may be activated if the control signal is lost. Refer to parameter 3001 AI<MIN FUNCTION and parameter 3002 PANEL LOSS.

<table>
<tr><th>Code</th><th>Description</th></tr>
<tr><td>1201</td><td>
CONST SPEED SEL
This parameter defines which digital inputs are used to select Constant Speeds.
0 = NOT SEL
Constant speed function disabled.
1...5 = DI1...DI5
Constant Speed 1 is selected with digital inputs DI1-DI5. Digital input activated = Constant Speed 1 activated.
6 = DI1,2
Three Constant Speeds (1 ... 3) are selected with two digital inputs.
Constant Speed selection with digital inputs DI1,2.
Table 2 Constant Speed selection with digital inputs DI1,2.
<table>
<tr><th>DI1</th><th>DI2</th><th>Function</th></tr>
<tr><td>0</td><td>0</td><td>No constant speed</td></tr>
<tr><td>1</td><td>0</td><td>Constant speed 1 (1202)</td></tr>
<tr><td>0</td><td>1</td><td>Constant speed 2 (1203)</td></tr>
<tr><td>1</td><td>1</td><td>Constant speed 3 (1204)</td></tr>
</table>
0 = DI deactivated, 1 = DI activated
7 = DI3,4
Three Constant Speeds (1 ... 3) are selected with two digital inputs as in DI1,2.
8 = DI4,5
Three Constant Speeds (1 ... 3) are selected with two digital inputs as in DI1,2.
9 = DI1,2,3
Seven Constant Speeds (1 ... 7) are selected with three digital inputs.
Table 3 Constant Speed selection with digital inputs DI1,2,3.
<table>
<tr><th>DI1</th><th>DI2</th><th>DI3</th><th>Function</th></tr>
<tr><td>0</td><td>0</td><td>0</td><td>No const. speed</td></tr>
<tr><td>1</td><td>0</td><td>0</td><td>Constant speed 1 (1202)</td></tr>
<tr><td>0</td><td>1</td><td>0</td><td>Constant speed 2 (1203)</td></tr>
<tr><td>1</td><td>1</td><td>0</td><td>Constant speed 3 (1204)</td></tr>
<tr><td>0</td><td>0</td><td>1</td><td>Constant speed 4 (1205)</td></tr>
<tr><td>1</td><td>0</td><td>1</td><td>Constant speed 5 (1206)</td></tr>
<tr><td>0</td><td>1</td><td>1</td><td>Constant speed 6 (1207)</td></tr>
<tr><td>1</td><td>1</td><td>1</td><td>Constant speed 7 (1208)</td></tr>
</table>
0 = DI deactivated, 1 = DI activated
10 = DI3,4,5
Seven Constant Speeds (1 ... 7) are selected with three digital inputs as in DI1,2,3.
</td></tr>
<tr><td>1202
-1208</td><td>
CONST SPEED 1... CONST SPEED 7
Constant speeds 1-7.
</td></tr>
</table>

Group 13: Analog Inputs

Code	Description
1301	**MINIMUM AI1** Relative minimum value of AI1 (%). Value corresponds to minimum reference set by parameter 1104 EXT REF1 MIN or 1107 EXT REF2 MIN. See Figure 3 on page 49.
1302	**MAXIMUM AI1** Maximum value of AI1 (%). Value corresponds to maximum reference set by parameter 1105 EXT REF1 MAX or 1108 EXT REF2 MAX. See Figure 3 on page 49.
1303	**FILTER AI1** Filter time constant for analog input AI1. As the analog input value changes, 63 % of the change takes place within the time specified by this parameter. **Note!** Even if you select 0 s for the filter time constant, the signal is still filtered with a time constant of 25 ms due to the signal interface hardware. This cannot be changed by any parameters. 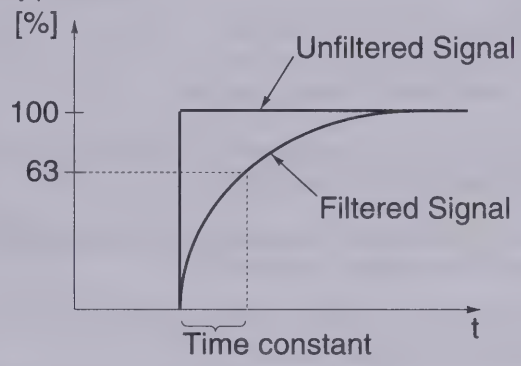 *Figure 4 Filter time constant for analog input AI1.*
1304	**MINIMUM AI2** Minimum value of AI2 (%). Value corresponds to minimum reference set by parameter 1104 EXT REF1 MIN or 1107 EXT REF2 MIN.
1305	**MAXIMUM AI2** Maximum value of AI2 (%). Value corresponds to maximum reference set by parameter 1105 EXT REF1 MAX or 1108 EXT REF2 MAX.
1306	**FILTER AI2** Filter time constant for AI2. Refer to parameter 1303 FILTER AI1.

Example: To set the minimum allowed analog input value to 4 mA, value for parameter 1301 MINIMUM AI1 (1304 MINIMUM AI2) is calculated as follows:

Value (%) = Desired minimum value / Full range of the analog input * 100%
= 4 mA / 20 mA * 100%
= 20%.

Note! In addition to this parameter setting, the analog input must be configured for 0-20 mA current signal. Refer to section L, Connection Examples “Frequency Reference from a Current Source”.

Group 14: Relay Outputs

Code	Description
1401	**RELAY OUTPUT 1** Relay output 1 content. Selects which information is indicated with relay output 1. 0 = NOT SEL Relay is not used and is de-energized. 1 = READY The ACS 140 is ready to function. The relay is energized unless no run enable signal is present or a fault exists and supply voltage is within range. 2 = RUN Relay energized when the ACS 140 is running. 3 = FAULT (-1) Relay energized when power is applied, and de-energized upon a fault trip. 4 = FAULT Relay energized when a fault is active. 5 = ALARM Relay energized when an alarm (AL10-22) is active. 6 = REVERSED Relay energized when motor rotates in reverse direction. 7 = SUPRV1 OVER Relay energized when the first supervised parameter (3201) exceeds the limit (3203). See “Group 32: Supervision” on page 65. 8 = SUPRV1 UNDER Relay energized when the first supervised parameter (3201) drops below the limit (3202). See “Group 32: Supervision” on page 65. 9 = SUPRV2 OVER Relay energized when the second supervised parameter (3204) exceeds the limit (3206). See “Group 32: Supervision” on page 65. 10 = SUPRV2 UNDER Relay energized when the second supervised parameter (3204) drops below the limit (3205).See “Group 32: Supervision” on page 65. 11 = AT SET POINT Relay energized when the output frequency is equal to the reference frequency.
1402	**RELAY OUTPUT 2** Relay output 2 content. Refer to parameter 1401 RELAY OUTPUT 1.

Group 15: Analog Output

Analog output is used to output the value of any parameter of the Operating Data group (Group 1) as a current signal. Output current minimum and maximum values are configurable, as are the allowed minimum and maximum values for the observed parameter.

If analog output content maximum value (parameter 1503) is set to less than the minimum value (parameter 1502), output current is inversely proportional to the value of the observed parameter.

Code	Description
1501	**AO CONTENT** Content for analog output. Number of any parameter of the Operating Data group (Group 01).
1502	**AO CONTENT MIN** Analog output content minimum. Display and default value depends on parameter 1501.
1503	**AO CONTENT MAX** Analog output content maximum. Display and default value depends on parameter 1501.
1504	**MINIMUM AO** Minimum output current.
1505	**MAXIMUM AO** Maximum output current.
1506	**AO FILTER** Filter time constant for AO.

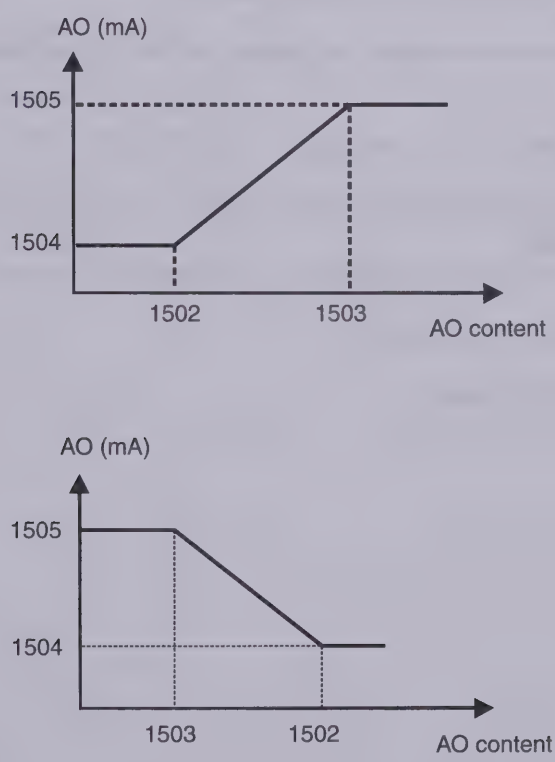

Figure 5 Analog output scaling.

Group 16: System Controls

Code	Description
1601	**RUN ENABLE** Selects the source of the run enable signal. 0 = NOT SEL The ACS 140 is ready to start without an external run enable signal. 1...5 = DI1 ... DI5 To activate the run enable signal, the selected digital input must be activated. If the voltage drops and deactivates the selected digital input, the ACS 140 will coast to stop and not start until the run enable signal resumes. 6 = COMM The run enable signal is given through serial communication.
1602	**PARAMETER LOCK** 0 = LOCKED Control panel START/STOP and REVERSE buttons and parameter modification disabled. Parameter value viewing is allowed. 1 = OPEN Panel operations are allowed. 2 = NOT SAVED Modified values not stored in permanent memory. **Note!** Option 0 (LOCKED) can only be selected in remote mode. **Note!** This parameter is not affected by macro selection.
1604	**FAULT RESET SEL** Fault reset source. **Note!** Fault reset is always possible with control panel. 0 = KEYPAD ONLY Fault reset is executed from the control panel keypad. 1...5 = DI1 ... DI5 Fault reset is executed from a digital input. Reset is activated by deactivating the input. 6 = START/STOP Fault reset is activated by Stop command. 7 = COMM Fault reset is executed through serial communication.
1608	**DISPLAY ALARMS** Controls the visibility of some of the alarms, see “Diagnostics” on page 75. 0 = NO Some of the alarms are suppressed. 1 = YES All of the alarms are enabled.

Group 20: Limits

Code	Description
2003	**MAX CURRENT** Maximum output current. The maximum output current that the ACS 140 will supply to the motor. The default value is 1.5 * I_N.
2005	**OVERVOLT CTRL** DC overvoltage controller enable. Fast braking of a high inertia load causes the DC bus voltage to rise to the overvoltage control limit. To prevent the DC voltage from exceeding the limit, the overvoltage controller automatically decreases the braking torque by increasing the output frequency. **Caution!** If a braking chopper and a braking resistor are connected to the ACS 140, this parameter value must be set to 0 to ensure proper operation of the chopper. 0 = DISABLE 1 = ENABLE
2006	**UNDERVOLT CTRL** DC undervoltage controller enable. If the DC bus voltage drops due to loss of input power, the undervoltage controller will decrease the motor speed in order to keep the DC bus voltage above the lower limit. By decreasing the output frequency, the inertia of the load will cause regeneration back into the ACS 140, thus keeping the DC bus charged, and preventing an undervoltage trip. This will increase power loss ride-through on systems with a high inertia, such as a centrifuge or fan. 0 = DISABLE 1 = ENABLE (TIME) Enable with 500 ms time limit for operation. 2 = ENABLE Enable without time limit for operation.
2007	**MINIMUM FREQ** Operating range minimum output frequency. **Note!** Keep MINIMUM FREQ ≤ MAXIMUM FREQ.
2008	**MAXIMUM FREQ** Operating range maximum output frequency.

Group 21: Start/Stop

ACS 140 supports several start and stop modes, including flying start and torque boosting at start. DC current can be injected either before the start command (premagnetizing) or automatically right after the start command (starting with DC hold).

DC hold can be used when stopping the drive with ramp. If drive is stopping by coasting, DC brake can be used.

Note! Too long a DC injection time or premagn max time causes the motor to heat up.

Code	Description
2101	**START FUNCTION** Conditions during motor acceleration. 1 = RAMP Ramp acceleration as set. 2 = FLYING START Flying start. Use this setting if the motor is already rotating and the drive will start smoothly at the current frequency. The drive will automatically seacrh for the correct output frequency. 3 = TORQUE BOOST Automatic torque boost might be necessary in drives with high starting torque. Torque boost is only applied at start. Boosting is stopped when the output frequency exceeds 20 Hz or when the output frequency is equal to the reference. See also parameter 2103 TORQ BOOST CURR. 4 = FLY + BOOST Activates both the flying start and torque boost.
2102	**STOP FUNCTION** Conditions during motor deceleration. 1 = COAST Motor coasts to stop. 2 = RAMP Ramp deceleration as defined by the active deceleration time 2203 DECELER TIME 1 or 2205 DECELER TIME 2.
2103	**TORQ BOOST CURR** Maximum supplied current during torque boost. See also parameter 2101 START FUNCTION.
2104	**STOP DC INJ TIME** DC injection time after modulation has stopped. If 2102 STOP FUNCTION is 1 (COAST), the ACS 140 uses DC braking. If 2102 STOP FUNCTION is 2 (RAMP), the ACS 140 uses DC hold after ramp.
2105	**PREMAGN SEL** Options 1- 5 select the source for the premagnetizing command. Option 6 selects start with DC hold. 0 = NOT SEL Premagnetizing not used. 1...5 = DI1...DI5 Premagnetizing command is received through a digital input. 6 = CONST Constant premagnetizing time after start command. Time is defined by parameter 2106 PREMAGN MAX TIME.
2106	**PREMAGN MAX TIME** Maximum premagnetizing time.

Code	Description
2107	**START INHIBIT** Start inhibit control. Start inhibit means that a pending start command is ignored when: • fault is reset, or • Run Enable activates while start command is active, or • mode change from local to remote takes place, or • mode change from remote to local takes place, or • switch from EXT1 to EXT2 takes place, or • switch from EXT2 to EXT1 takes place. 0 = OFF Start inhibit control disabled. Drive will start after fault is reset, Run Enable is activated or mode is changed while there is a pending start command. 1 = ON Start inhibit control enabled. Drive will not start after fault is reset, Run Enable is activated or mode is changed. In order to start the drive again, you must enter a new Start command.

Group 22: Accel/Decel

Two acceleration/deceleration ramp pairs can be used. If both ramp pairs are used, selection can be made between these in run time through a digital input. The S curve of the ramps is adjustable.

Code	Description
2201	**ACC/DEC 1/2 SEL** Selects the source for the ramp pair selection signal. 0 = NOT SEL The first ramp pair is used (ACCELER TIME 1/DECELER TIME 1). 1...5 = DI1...DI5 Ramp pair selection is accomplished through a digital input (DI1 to DI5). Digital input deactivated = Ramp pair 1 (ACCELER TIME 1/DECELER TIME 1) is used. Digital input activated = Ramp pair 2 (ACCELER TIME 2/DECELER TIME 2) is used. **Note!** Ramp pair selection is not followed under serial link control.
2202	**ACCELER TIME 1** Ramp 1: time from zero to maximum frequency (0 - MAXIMUM FREQ).
2203	**DECELER TIME 1** Ramp 1: time from maximum frequency to zero (MAXIMUM FREQ - 0).
2204	**ACCELER TIME 2** Ramp 2: time from zero to maximum frequency (0 - MAXIMUM FREQ).
2205	**DECELER TIME 2** Ramp 2: time from maximum frequency to zero (MAXIMUM FREQ - 0).
2206	**RAMP SHAPE** Acceleration/deceleration ramp shape selection. 0 = LINEAR 1 = FAST S CURVE 2 = MEDIUM CURVE 3 = SLOW S CURVE

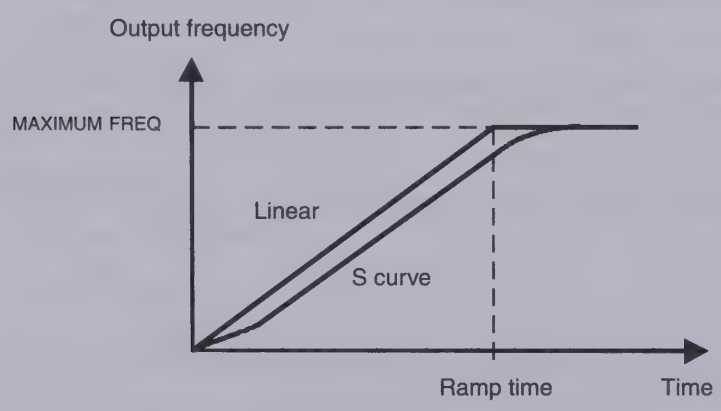

Figure 6 Definition of acceleration/deceleration ramp time.

Group 25: Critical Freq

In some mechanical systems, certain speed ranges can cause resonance problems. With this parameter group, it is possible to set up to two different speed ranges which the ACS 140 will skip over.

Note! When the PID Control macro is used, critical frequencies are ignored.

Code	Description
2501	**CRIT FREQ SEL** Critical frequencies activation. 0 = OFF 1 = ON
2502	**CRIT FREQ 1 LO** Critical frequency 1 start. **Note!** If LOW > HI, no critical frequency lock-out will occur.
2503	**CRIT FREQ 1 HI** Critical frequency 1 end.
2504	**CRIT FREQ 2 LO** Critical frequency 2 start.
2505	**CRIT FREQ 2 HI** Critical frequency 2 end. **Note!** If LOW > HI, no critical frequency lock-out will occur.

Example: A fan system vibrates badly from 18 Hz to 23 Hz and from 46 Hz to 52 Hz. Set the parameters as follows:

CRIT FREQ 1 LO = 18 Hz and CRIT FREQ 1 HI = 23 Hz
CRIT FREQ 2 LO = 46 Hz and CRIT FREQ 2 HI = 52 Hz

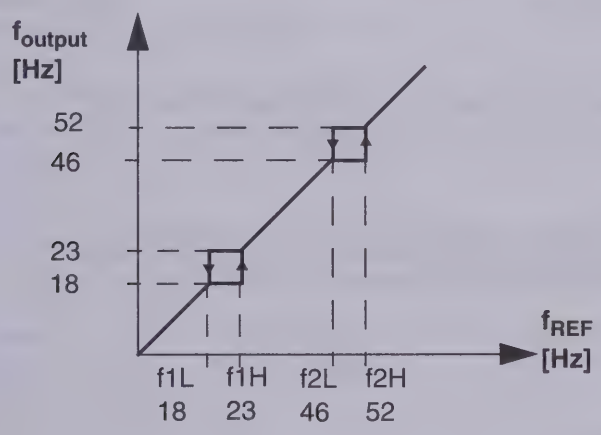

Figure 7 Example of critical frequencies setting in a fan system with bad vibrations at frequency ranges 18 Hz to 23 Hz and 46 Hz to 52 Hz.

Group 26: Motor Control

Code	Description
2603	**IR COMPENSATION** IR compensation voltage at 0 Hz. **Note!** IR compensation should be kept as low as possible to prevent overheating. Refer to Table 4.

Table 4 Typical IR compensation values.

200 V Units					
P_N / HP	1/6	1/4	1/3	1/2	3/4
IR comp / V	30	27	25	23	21

200 V Units				
P_N / HP	1	1.5	2	3
IR comp / V	18	16	14	13

400 V Units						
P_N / HP	1/2	3/4	1	1.5	2	3
IR comp / V	37	33	30	27	25	23

2604	**IR COMP RANGE** IR compensation range. Defines the frequency after which the IR compensation is 0 V.
2605	**LOW NOISE** Motor acoustical noise option. 0 = STANDARD (switching frequency 4 kHz) 1 = LOW NOISE (switching frequency 8 kHz) 2 = SILENT (switching frequency 16 kHz) **Note!** When the low noise (8 kHz) setting is used, the maximum loadability of the ACS 140 is I_2 at 30 °C ambient temperature or 0.9 * I_2 at 40 °C. When the silent (16 kHz) setting is used, the maximum loadability is 0.75 * I_2 at 30 °C ambient temperature. (except ACS 143-1K1-3, ACS 143-2K1-3, ACS 143-1H1-3 and ACS 143-2H1-3 for which the maximum loadability is 0.55 * I_2 at 30 °C.)
2606	**U/F RATIO** U/f ratio below field weakening point. 1 = LINEAR 2 = SQUARE Linear is preferred for constant torque applications and Square for centrifugal pump and fan applications. (Square is more silent for most operating frequencies.)
2607	**SLIP COMP RATIO** A squirrel-cage motor will slip under load. The slip can be compensated by increasing the frequency as the motor torque increases. This parameter defines the gain for the slip. 100 % means full slip compensation; 0 % means no slip compensation.

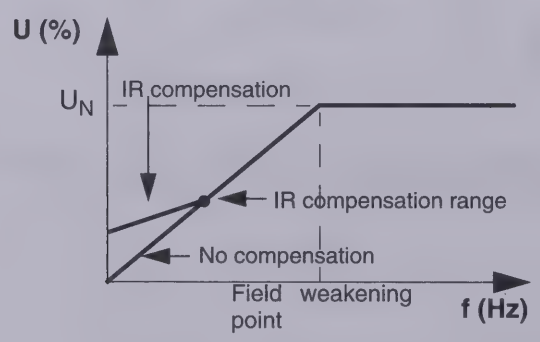

Figure 8 Operation of IR compensation.

Group 30: Fault Functions

ACS 140 can be configured to respond as desired to certain abnormal external conditions: analog input fault, external fault signal and panel loss.

In these cases, the drive can continue operation at current speed, continue at a set constant speed while showing an alarm, ignore the condition, or trip on a fault and stop.

Motor thermal protection parameters 3004 - 3008 provide a means of adjusting the motor load curve. For example, limiting the load near zero speed might be necessary if the motor does not have a cooling fan.

Stall protection (parameters 3009 - 3012) includes parameters for stall frequency, stall time and current.

Code	Description
3001	**AI<MIN FUNCTION** Operation in case the AI signal drops below fault limit 3013 AI1 FAULT LIMIT or 3014 AI2 FAULT LIMT. 0 = NOT SEL No operation. 1 = FAULT A fault indication is displayed and the ACS 140 coasts to stop. 2 = CONST SPEED 7 A warning indication is displayed and the speed is set according to parameter 1208 CONST SPEED7. 3 = LAST SPEED A warning indication is displayed and the speed is set to the level at which the ACS 140 was last operating. This value is determined by the average speed over the last 10 seconds. **Caution:** If you select CONST SPEED 7 or LAST SPEED, make sure that it is safe to continue operation in case analog input signal is lost.
3002	**PANEL LOSS** Operation in case of control panel loss fault. 1 = FAULT A fault indication is displayed and the ACS 140 coasts to stop. 2 = CONST SPEED7 A warning indication is displayed and the speed is set according to parameter 1208 CONST SPEED7. 3 = LAST SPEED A warning indication is displayed and the speed is set to the level at which the ACS 140 was last operating. This value is determined by the average speed over the last 10 seconds. **Caution:** If you select CONST SPEED 7 or LAST SPEED, make sure that it is safe to continue operation in case panel is lost.
3003	**EXTERNAL FAULT** External fault input selection. 0 = NOT SEL External fault signal is not used. 1...5 = DI1...DI5 This selection defines the digital input used for an external fault signal. If an external fault occurs, i.e. digital input is deactivated, the ACS 140 is stopped and the motor coasts to stop and fault indication is displayed.

Code	Description
3004	**MOTOR THERM PROT** Motor overtemperature function. This parameter defines the operation of the motor thermal protection function which protects the motor from overheating. 0 = NOT SEL 1 = FAULT Displays a warning indication at the warning level (97.5 % of the nominal value). Displays a fault indication when the motor temperature reaches the 100 % level. The ACS 140 coasts to stop. 2 = WARNING A warning indication is displayed when the motor temperature reaches the warning level (95 % of the nominal value).
3005	**MOT THERM TIME** Time for 63 % temperature rise.This is the time within which the motor temperature reaches 63 % of the final temperature rise. Figure 9 shows motor thermal time definition. If thermal protection according to UL requirements for NEMA class motors is desired, use this rule of thumb - MOTOR THERM TIME equals 35 times t6 (t6 in seconds is the time that the motor can safely operate at six times its rated current, given by the motor manufacturer). The thermal time for a Class 10 trip curve is 350 s, for a Class 20 trip curve 700 s and for a Class 30 trip curve 1050 s. 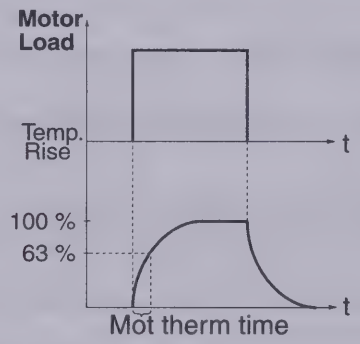 *Figure 9 Motor thermal time.*
3006	**MOT LOAD CURVE** Motor current maximum limit. MOTOR LOAD CURVE sets the maximum allowable operating load of the motor. When set to 100 %, the maximum allowable load is equal to the value of Start-up Data parameter 9906 MOTOR NOM CURRENT. The load curve level should be adjusted if the ambient temperature differs from the nominal value. 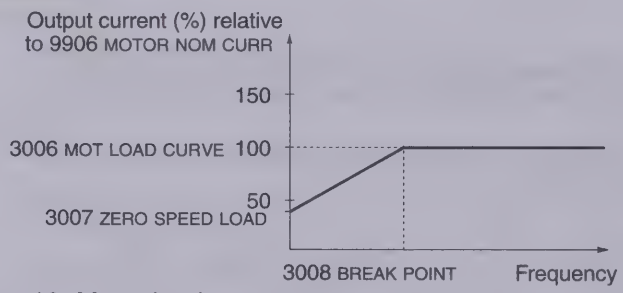 *Figure 10 Motor load curve.*
3007	**ZERO SPEED LOAD** This parameter defines the maximum allowable current at zero speed relative to 9906 MOTOR NOM CURR. Refer to Figure 10.
3008	**BREAK POINT** Break point of motor load curve. Refer to Figure 10 for an example of a motor load curve. See Figure 12.

Code	Description
3009	**STALL FUNCTION** This parameter defines the operation of the stall protection. The protection is activated if the output current becomes too high compared to output frequency, refer to Figure 11. 0 = NOT SEL Stall protection is not used. 1 = FAULT When the protection is activated the ACS 140 coasts to stop. Fault indication is displayed. 2 = WARNING A warning indication is displayed. The indication disappears in half the time set by parameter 3012 STALL TIME. 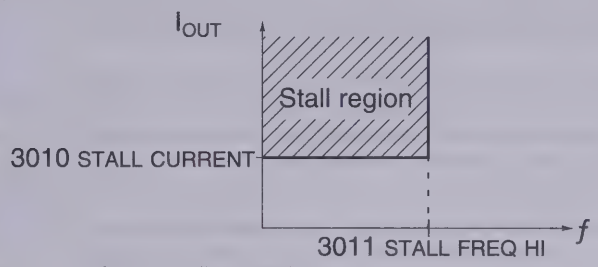 *Figure 11 Motor stall protection.*
3010	**STALL CURRENT** Current limit for stall protection. Refer to Figure 11.
3011	**STALL FREQ HI** This parameter sets the frequency value for the stall function. Refer to Figure 11.
3012	**STALL TIME** This parameter sets the time value for the stall function.
3013	**AI1 FAULT LIMIT** Fault level for analog input 1 supervision. See parameter 3001 AI1<MIN FUNCTION.
3014	**AI2 FAULT LIMIT** Fault level for analog input 2 supervision. See parameter 3002 AI2<MIN FUNCTION.

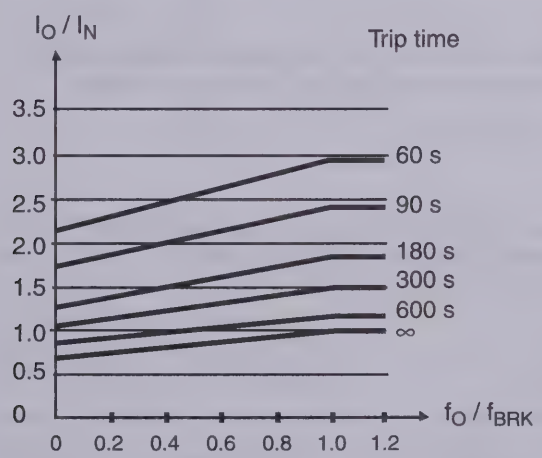

I_O = output current
I_N = nominal current of the motor
f_O = output frequency
f_{BRK} = break point frequency (parameter 3008 BREAK POINT)

Figure 12 Thermal protection trip times when parameters 3005 MOT THERM TIME, 3006 MOT LOAD CURVE and 3007 ZERO SPEED LOAD have default values.

Group 31: Automatic Reset

The automatic reset system can be used for resetting overcurrent, overvoltage, undervoltage and analog input loss faults automatically. The number of allowed automatic reset operations within a certain time is selectable.

Warning! If parameter 3107 AR AI<MIN is enabled, the drive may restart even after a long stop when the analog input signal is restored. Ensure that the use of this feature will not cause physical injury and/or damage equipment.

Code	Description
3101	**NR OF TRIALS** Sets the number of allowed autoresets within a certain time. The time is defined with parameter 3102 TRIAL TIME. The ACS 140 prevents additional autoresets and remains stopped until a successful reset is performed from the control panel or from a place selected by parameter 1604 FAULT RESET SEL.
3102	**TRIAL TIME** The time within which a limited number of fault autoresets is allowed. The allowed number of faults per this time period is given with parameter 3101 NR OF TRIALS.
3103	**DELAY TIME** This parameter sets the time that the ACS 140 will wait after a fault occurs before attempting to reset. If set to zero, the ACS 140 will reset immediately.
3104	**AR OVERCURRENT** 0 = DISABLE 1 = ENABLE If 1 is selected, the fault (motor overcurrent) is reset automatically after the delay set by parameter 3103, and the ACS 140 resumes normal operation.
3105	**AR OVERVOLTAGE** 0 = DISABLE 1 = ENABLE If 1 is selected, the fault (DC bus overvoltage) is reset automatically after the delay set by parameter 3103, and the ACS 140 resumes normal operation.
3106	**AR UNDERVOLTAGE** 0 = DISABLE 1 = ENABLE If 1 is selected, the fault (DC bus undervoltage) is reset automatically after the delay set by parameter 3103 DELAY TIME, and the ACS 140 resumes normal operation.
3107	**AR AI<MIN** 0 = DISABLE 1 = ENABLE If 1 is selected, the fault (analog input signal under minimum level) is reset automatically after the delay set by parameter 3103 DELAY TIME.

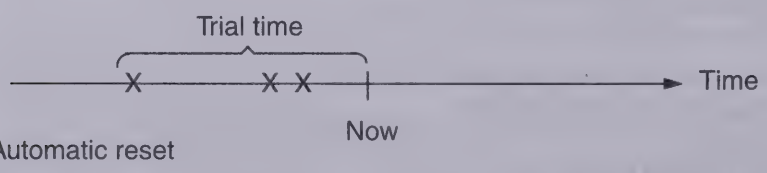

Figure 13 Operation of automatic reset function. In this example, if the fault occurs at the moment "Now", it is automatically reset if parameter 3101 NR OF TRIALS value is greater than or equal to 4.

Group 32: Supervision

Parameters of this group are used together with relay output parameters 1401 RELAY OUTPUT 1 and 1402 RELAY OUTPUT 2. Any two parameters of the Operating Data group (Group 1) can be supervised. Relays can be configured to be energized when the values of supervised parameters are either too low or too high.

Code	Description
3201	**SUPERV 1 PARAM** First supervised parameter number of the Operating Data group (Group 01).
3202	**SUPERV 1 LIM LO** First supervision limit low. Display of this parameter depends on selected supervised parameter (3201).
3203	**SUPERV 1 LIM HI** First supervision limit high. Display of this parameter depends on selected supervised parameter (3201).
3204	**SUPERV 2 PARAM** Second supervised parameter number of the Operating Data group (Group 01).
3205	**SUPERV 2 LIM LO** Second supervision limit low. Display of this parameter depends on selected supervised parameter (3204).
3206	**SUPERV 2 LIM HI** Second supervision limit high. Display of this parameter depends on selected supervised parameter (3204).

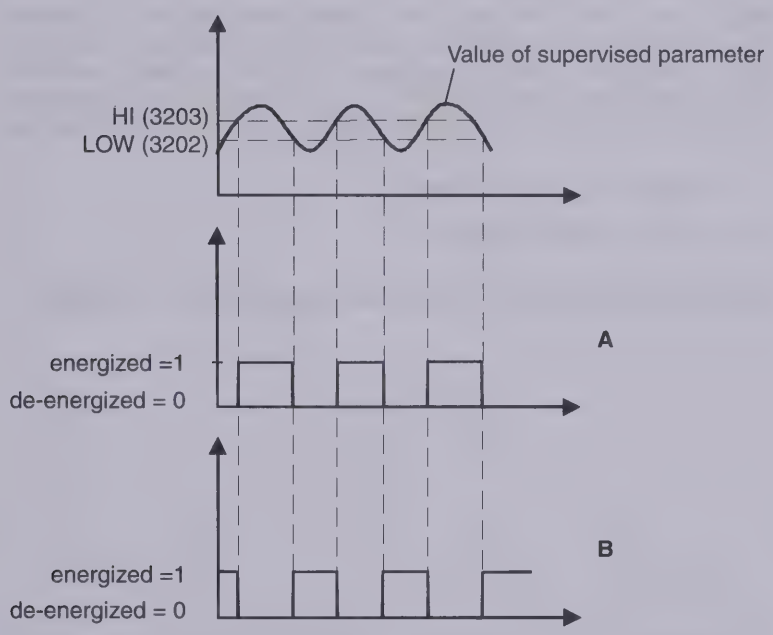

A = Parameter 1401 RELAY OUTPUT 1 (1402 RELAY OUTPUT 2) value is SUPRV1 OVER or SUPRV2 OVER

B = Parameter 1401 RELAY OUTPUT 1 (1402 RELAY OUTPUT 2) value is SUPRV1 UNDER or SUPRV2 UNDER

Note! Case LOW ≤ HIGH represents a normal hysteresis.

Case A: Is for monitoring when/if the supervised signal exceeds a given limit.

Case B: Is for monitoring when/if the supervised signal falls below a given limit.

Figure 14 Operating data supervision using relay outputs, when LOW ≤ HIGH.

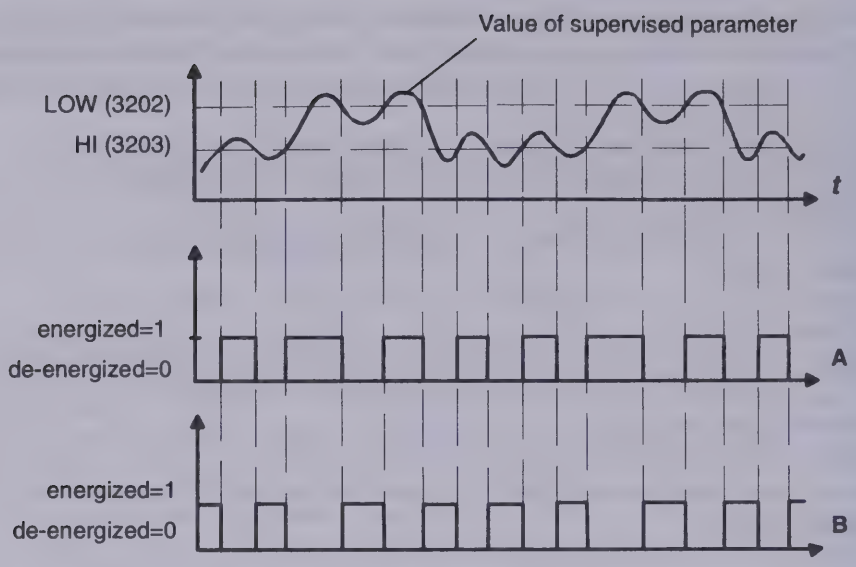

A = Parameter 1401 RELAY OUTPUT 1 (1402 RELAY OUTPUT 2) value is SUPRV1 OVER or SUPRV2 OVER.

B = Parameter 1402 RELAY OUTPUT 1 (1402 RELAY OUTPUT 2) value is SUPRV1 UNDER or SUPRV2 UNDER.

Note! Case LOW>HIGH represents a special hysteresis with two separate supervision limits. Depending on whether the supervised signal has gone below value HIGH (3203) or above value LOW (3202), determines which limit is being used. Initially HIGH is used, until the signal goes above value LOW. After this the limit used is LOW, until the signal goes back below value HIGH.

A = Initially the relay is de-energized.

B = Initially the relay is energized.

Figure 15 Operating data supervision using relay outputs, when LOW>HIGH.

Group 33: Information

Code	Description
3301	**SW VERSION** Software version.
3302	**TEST DATE** Displays the test date of the ACS 140 (yy.ww).

Group 40: PID Control

The PID Control Macro allows the ACS 140 to take a reference signal (setpoint) and an actual signal (feedback), and automatically adjust the speed of the drive to match the actual signal to the reference. Figure 26 on page 88 shows the connections of internal signals when the PID Control macro is selected.

The PID sleep function can be used to stop the regulation when the output of the PID controller falls below a preset limit. Regulation is resumed when the process actual value falls below the preset limit. Alternatively, the sleep function can be activated and deactivated through a digital input.

Code	Description
4001	**PID GAIN** This parameter defines the gain of the PID Controller. The setting range is 0.1... 100. If you select 1, a 10 % change in error value causes the PID Controller output to change by 10 %. *Table 5 Effect of gain when* MAXIMUM FREQ *is 50 Hz.* **PID Gain** / **Frequency Change for a 10 % Change in Error** / **Frequency Change for a 50 % Change in Error** 0.5 / 2.5 Hz / 12.5 Hz 1.0 / 5 Hz / 25 Hz 3.0 / 15 Hz / 60 Hz * * Limited by parameter 2008 MAXIMUM FREQ.
4002	**PID INTEG TIME** PID controller integration time. Defined as the time in which the maximum output is achieved if a constant error value exists and the gain is 1. Integration time 1 s denotes that a 100 % change is achieved in 1 s. 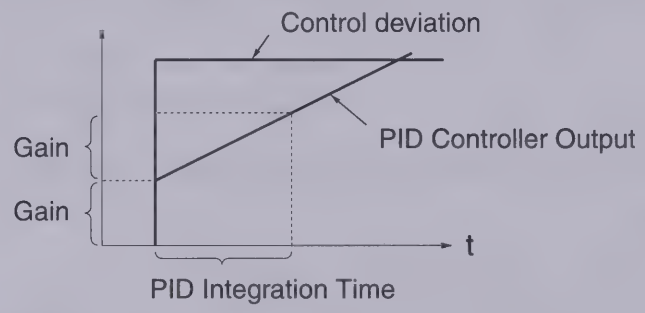
4003	**PID DERIV TIME** PID controller derivation time. If the process error value changes linearly, the derivative component of the PID control adds a constant value into the PID controller output. The derivative is filtered with a 1-pole filter. The time constant of the filter is defined by parameter 4004 PID DERIV FILTER. 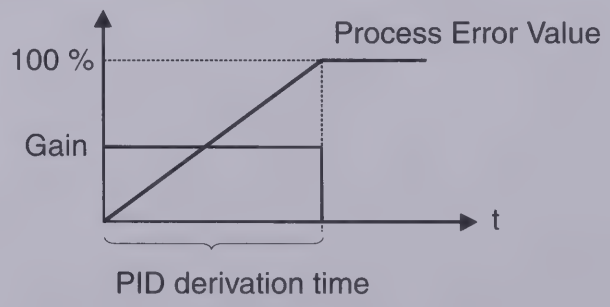

Code	Description
4004	**PID DERIV FILTER** Time constant for the filter of derivative. By increasing the filter time constant it is possible to smooth the effect of the derivative and suppress noise.
4005	**ERROR VALUE INV** Process error value inversion. Normally, a decrease in feedback signal causes an increase in drive speed. If a decrease in feedback signal is desired to cause a decrease in speed, set ERROR VALUE INV to 1 (YES). 0 = NO 1 = YES
4006	**ACTUAL VAL SEL** PID controller feedback (actual) signal selection. Feedback signal can be a combination of two actual values ACT1 and ACT2. Source for actual value 1 is selected by parameter 4007 and source for actual value 2 is selected by parameter 4008. 1 = ACT1 Actual value 1 is used as the feedback signal. 2 = ACT1-ACT2 Difference of actual values 1 and 2 is used as the feedback signal. 3 = ACT1+ACT2 Sum of actual values 1 and 2. 4 = ACT1*ACT2 Product of actual values 1 and 2. 5 = ACT1/ACT2 Quotient of actual values 1 and 2. 6 = MIN (A1, A2) Smaller of actual values 1 and 2. 7 = MAX (A1, A2) Greater of actual values 1 and 2. 8 = sq (A1-A2) Square root of difference of actual values 1 and 2. 9 = sqA1 + sqA2 Sum of square roots of actual values 1 and 2.
4007	**ACT1 INPUT SEL** Source for actual value 1 (ACT1). 1 = AI 1 Analog input 1 is used as actual value 1. 2 = AI 2 Analog input 2 is used as actual value 1.
4008	**ACT2 INPUT SEL** Source for actual value 2 (ACT2). 1 = AI 1 Analog input 1 is used as actual value 2. 2 = AI 2 Analog input 2 is used as actual value 2.

Code	Description
4009	**ACT1 MINIMUM** Minimum value for actual value 1 (ACT1). The setting range is -1000 to +1000 %. Refer to Figure 16 and to Group 13 parameters for analog input minimum and maximum settings.
4010	**ACT1 MAXIMUM** Maximum value for actual value 1 (ACT1). The setting range is -1000 to +1000 %. Refer to Figure 16 and to Group 13 parameters for analog input minimum and maximum settings.
4011	**ACT2 MINIMUM** Minimum value for actual value 2 (ACT2). Refer to parameter 4009.
4012	**ACT2 MAXIMUM** Maximum value for actual value 2 (ACT2). Refer to parameter 4010.

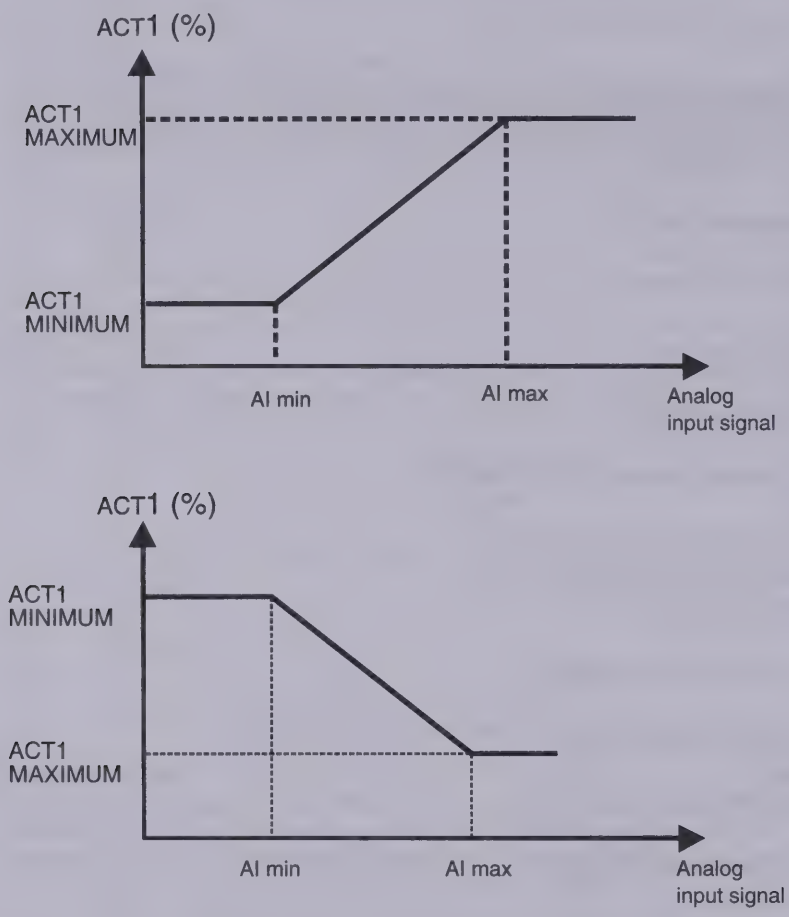

Figure 16 Actual value scaling. The range of the analog input signal is set by parameters 1301 and 1302 or parameters 1304 and 1305, depending on the analog input used.

Code	Description
4013	**PID SLEEP DELAY** Time delay for the sleep function, see Figure 17. If the ACS 140 output frequency is below a set level (parameter 4014 SLEEP LEVEL) longer than PID SLEEP DELAY, ACS 140 is stopped.
4014	**PID SLEEP LEVEL** Level for activation of the sleep function, see Figure 17. When the ACS 140 output frequency falls below the sleep level, the sleep delay counter is started. When the ACS 140 output frequency rises above the sleep level, the sleep delay counter is reset. **Note!** Sleep level comparison is also inverted when the error value is inverted using parameter 4005 ERROR VALUE INV.
4015	**WAKE-UP LEVEL** Level for deactivation of the sleep function. This parameter sets a process actual value limit for the sleep function (see Figure 16).The limit floats with the process reference. **Non-inverted error value** Applied wake-up level is according to the following formula: Limit = parameter 1107 + parameter 4015 * (set point - parameter 1107) / (parameter 1108 - parameter 1107) When the actual value is less than or equal to this value, the sleep function is de-activated. See figure 18. **Inverted error value** Applied wake-up level is according to the following formula: Limit = parameter 1108 + parameter 4015 * (parameter 1108 - setpoint) / (parameter 1108 - parameter 1107) When the actual value is higher than or equal to this value, the sleep function is de-activated. See figure 19.

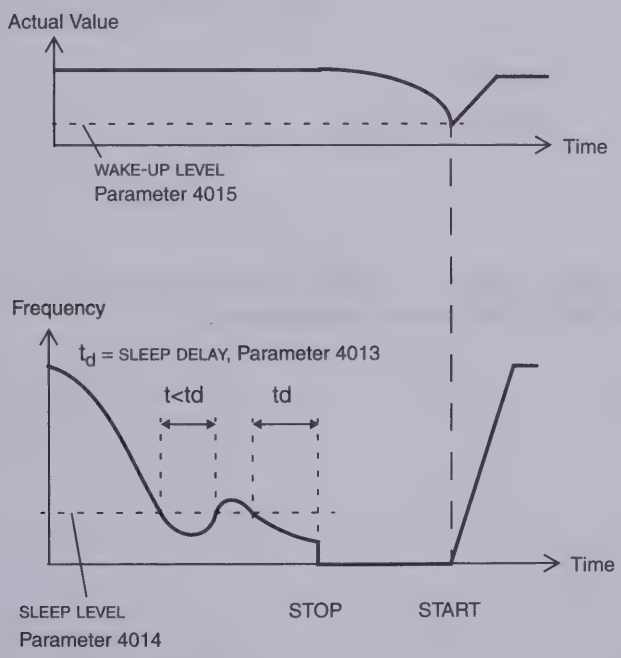

Figure 17 Sleep function operation.

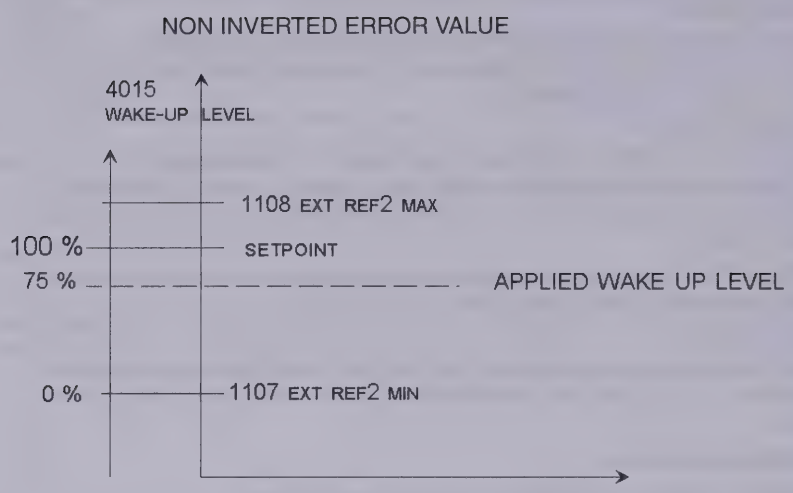

Figure 18 Example of how the applied wake-up level floats with the set point, here parameter 4015 WAKE-UP LEVEL equals to 75 %, PID control non-inverted case.

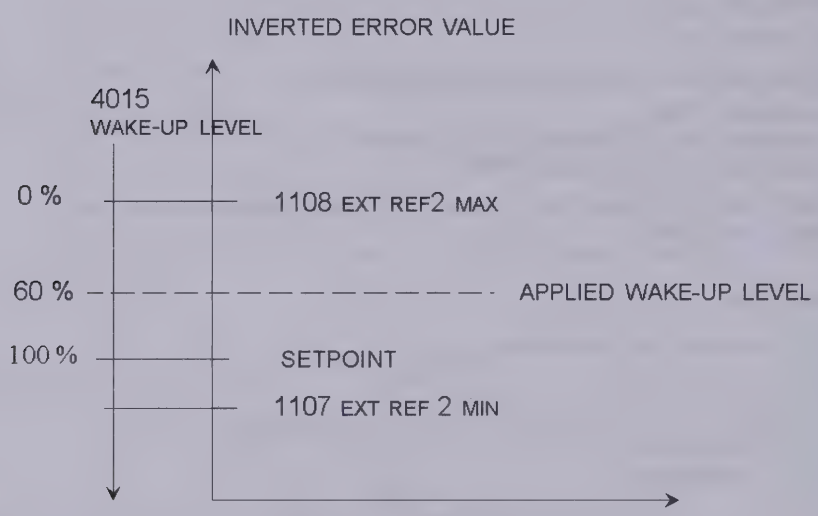

Figure 19 Example of how applied wake-up level floats with the set point, here parameter 4015 WAKE-UP LEVEL equals to 60 %, PID control inverted case.

Code	Description
4019	**SET POINT SEL** Set point selection. Defines the reference signal source for the PID controller. **Note!** When the PID regulator is by-passed (parameter 8121 REG BYPASS CTRL), this parameter has no significance. 1 = INTERNAL Process reference is a constant value set with parameters 4020 INTERNAL SETPNT1, 4021 INTERNAL STPNT2, 4022 INTERNAL SETPNT SEL. 2 = EXTERNAL Process reference is read from a source defined with parameter 1106 EXT REF2 SELECT. The ACS 400 must be in remote mode (REM is shown on control panel display).* * Process reference to PID controller can also be given from the control panel in local mode (LOC is shown on control panel display) if the panel reference is given as percentage, i.e. value of parameter 1101 KEYPAD REF SEL = 2 (REF2 (%)).
4020, 4021	**INTERNAL SETPNT1, iNTERNAL SETPNT2** Sets a constant process reference (%) for the PID controller. The PID controller follows either one of these references if parameter 4019 SET POINT SEL is set to 1 (INTERNAL), see also parameter 4022 INTERNAL SETPNT SEL.
4022	**INTERNAL SETPNT SEL** Selects the internal setpoint. 1..5 = DI1..5 Internal setpoint selection is done through digital input (DI1 to DI5). When the digital input is deactivated, parameter 4020 INTERNAL SETPNT1 is being used. When the digital input is activated, parameter 4021 INTERNAL SETPNT2 is being used. 6 = SETPNT1 4020 INTERNAL SETPNT1 is used as the internal setpoint. 7 = SETPNT2 4021 INTERNAL SETPNT2 is used as the internal setpoint.

Group 52: Serial Communication

The serial communication link of the ACS 140 uses Modicon Modbus protocol. For description of the ACS 140 serial communication capabilities, as well as for the descriptions of the parameters of this group, refer to the *ACS 140 RS485 and RS232 Adapter Installation and Start-up Guide*.

Diagnostics

General

This chapter describes the various diagnostic displays of the control panel and lists the most common causes for the particular display. If the fault cannot be resolved by the given instructions, contact your local ABB Authorized Drives Distributor.

Caution! Do not attempt any measurement, parts replacement or other service procedures not described in this manual. Such actions will void warranty, endanger correct operation, and increase downtime and expense.

Alarm and Fault displays

The seven-segment display unit of the control panel indicates alarms and faults using codes "ALxx" or "FLxx", where xx is the corresponding alarm or fault code.

Alarms 1-7 come from button operation. The Green LED blinks for AL10-21, meaning that the ACS 140 cannot fully follow the control commands. The faults are indicated by the Red LED.

The alarm and fault messages disappear by pressing MENU, ENTER or the arrow buttons of the control panel. The message will reappear after a few seconds if the keypad is not touched and the alarm or fault is still active.

The last three fault codes are stored into parameters 0128-0130. These fault memories can be cleared from the control panel by pressing the UP and DOWN buttons simultaneously in parameter set mode.

Fault Resetting

Faults that are indicated by a red blinking LED are reset by turning the power off for a while. Other faults (indicated by red static LED) can be reset either from the control panel, by digital input or serial communication, or switching the supply voltage off for a while. When the fault has been removed, the motor can be started.

The ACS 140 can be configured to automatically reset certain faults. Refer to parameter group 31 AUTOMATIC RESET.

Warning! If an external source for the start command is selected and is still active, the ACS 140 may start immediately after a fault is reset.

Warning! All electrical installation and maintenance work described in this chapter should only be undertaken by a qualified electrician. The Safety Instructions on the first pages of this manual must be followed.

Table 6 Alarms.

Code	Description
AL 1	Parameter upload/download failed.
AL 2	Operation is not allowed while start is active.
AL 3	Operation is not allowed in current control mode (Local or Remote).
AL 5	Start/Stop/Direction or reference from control panel is not followed. Possible causes: • Remote mode: parameters disable the buttons (See APPENDIX.) • Local mode: START/STOP button interlocked from digital inputs.
AL 6	Operation is not allowed. Parameter 1602 PARAMETER LOCK is active.
AL 7	Use of factory macro disables operation.
AL10*	Overcurrent controller is active.
AL11*	Overvoltage controller is active.
AL12*	Undervoltage controller is active.
AL13	Direction lock. See parameter 1003 DIRECTION.
AL14	Serial communication loss alarm, see the *ACS 140 RS485 and RS232 Adapter Installation and Start-up Guide.*
AL15*	Modbus exception response is sent through serial communication.
AL16	Analog input 1 loss. Analog input 1 value is less than MINIMUM AI1 (1301). See also parameter 3001 AI<MIN FUNCTION.
AL17	Analog input 2 loss. Analog input 2 value is less than MINIMUM AI2 (1306). See also parameter 3001 AI<MIN FUNCTION.
AL18*	Panel loss. Panel is disconnected when Start/Stop/Dir or reference is coming from panel. See parameter 3002 PANEL LOSS and APPENDIX A.
AL19*	Hardware overtemperature (at 95 % of the trip limit).
AL20*	Motor overtemperature (at 95 % of the trip limit), see 3004 MOTOR THERM PROT.
AL21	Motor stall alarm. See parameter 3009 STALL FUNCTION.

Note! Alarms (*) will be shown only if parameter 1608 DISPLAY ALARMS is set to 1(YES).

Table 7 Faults.

Code	Description
FL 1	Overcurrent: • Possible mechanical problem. • Acceleration and/or deceleration times may be too short. • Supply disturbances.
FL 2	DC overvoltage: • Input voltage is too high. • Deceleration time may be too short.
FL 3	ACS 140 overtemperature: • Ambient temperature too high. • Severe overload.
FL 4 *	Fault current: • Output ground fault (200 V units). • Short circuit. • Supply disturbances.
FL 5	Output overload.
FL 6	DC undervoltage.
FL 7	Analog input 1 fault. Analog input 1 value is less than MINIMUM AI1 (1301). See also parameter 3001 AI<MIN FUNCTION.
FL 8	Analog input 2 fault. Analog input 2 value is less than MINIMUM AI2 (1304). See also parameter 3001 AI<MIN FUNCTION.
FL 9	Motor overtemperature. See parameters 3004-3008.
FL10	Panel loss. Panel is disconnected when Start/Stop/Dir or reference is coming from panel. See parameter 3002 PANEL LOSS and APPENDIX. **Note!** If FL10 is active when the power is turned off, the ACS 140 will start in remote control (**REM**) when the power is turned back on.
FL11	Parameters inconsistent. Possible fault situations: • MINIMUM AI1 > MAXIMUM AI1 (parameters 1301 and 1302) • MINIMUM AI2 > MAXIMUM AI2 (parameters 1304 and 1305) • MINIMUM FREQ > MAXIMUM FREQ (parameters 2007 and 2008)
FL12	Motor stall. See parameter 3009 STALL FUNCTION.
FL13	Serial communication loss.
FL14	External fault is active. See parameter 3003 EXTERNAL FAULT.
FL15	Output ground fault (400 V units).
FL16 *	DC bus ripple too large. Check supply.
FL17	Analog input out of range. Check AI level.
FL18 - FL22 *	Hardware error. Contact supplier.
Full display blinking	Serial link failure. • Bad connection between the control panel and the ACS 140. • Serial communication parameters (group 52) have been altered. Keep panel connected and switch power off and then on again.

Note! Faults (*) that are indicated by a red blinking LED are reset by turning the power off and on. Other faults are reset by pressing the START/STOP button. See also parameter 1604.

ACS 140 EMC Instructions

Mandatory Installation Instruction According to the EMC Directive for type ACS 140 frequency converters

Follow the instructions given in the ACS 140 User´s Manual and the instructions delivered with different accessories.

CE Marking

A CE mark is attached to ACS 140 frequency converters to verify that the unit follows the provisions of the European Low Voltage and EMC Directives (Directive 73/23/EEC, as amended by 93/68/EEC and Directive 89/336/EEC, as amended by 93/68/EEC).

The EMC Directive defines the requirements for immunity and emissions of electrical equipment used in European Economic Area. The EMC product standard EN 61800-3 covers the requirements stated for frequency converters. ACS 140 frequency converters comply with the requirements stated in EN 61800-3 for Second Environment and First Environment.

Product standard EN 61800-3 (Adjustable speed electrical power drive systems - Part 3: EMC product standard including specific test methods) defines **First Environment** as environment that includes domestic premises. It also includes establishments directly connected without intermediate transformers to a low voltage power supply network which supplies buildings used for domestic purposes. The **Second Environment** includes establishments other than those directly connected to a low voltage power supply network which supplies buildings used for domestic purposes. With ACS 140, no RFI filter is needed in Second Environment.

C-Tick Marking (pending)

A C-tick mark is attached to 3-phase 380 V- 480 V ACS 140 frequency converters (types ACS 143-xKx-3) to verify that the unit follows the provisions of the Australian Statuary Rules No 294, 1996, Radiocommunication (Compliance Labelling - Incidental Emissions) Notice and the Radiocommunication Act, 1989, and the Radiocommunication Regulations, 1993, of New Zealand.

The statutory rules defines the essential requirements for emissions of electrical equipment used in Australia and New Zealand. The standard AS/NZS 2064, 1997, Limits and methods of measurement of electronic disturbance characteristics of industrial, scientific and medical (ISM) radiofrequency equipment, covers the detailed requirements for three-phase frequency converter.

The frequency converter ACS 143-xKx-3 comply with the AS/NZS 2064, 1997, limits for class A equipment. Class A equipment is suitable for use in all establishments other than domestic and those directly connected to a low voltage network which supplies buildings used for domestic purposes. The compliance is valid with the following provisions:

- The frequency converter is equipped with RFI-filter.
- The motor and control cables are chosen as specified in this manual for use in public low-voltage network.
- The installation rules of this manual are followed.

Cabling Instructions

Keep individual unscreened wires between the cable clamps and the screw terminals as short as possible. Route control cables away from power cables.

Input Power Cable

A three conductor cable (single phase and neutral with protective ground) or four conductor cable (three phase with protective ground) are recommended for the input cabling. Shielding is not necessary. Dimension the cables and fuses in accordance with the input current. Always pay attention to local codes when sizing the cables and fuses.

The power input connectors are at the top of the converter unit. Input cable routing must be done so that the distance from the sides of the converter is at least 13/16" (*20 cm*) to avoid excessive radiation to the input cable. In the case of screened cable, twist the cable screen wires together into a bundle not longer than five times its width and connect to the PE terminal of the converter. (Or PE terminal of the input filter, if present.)

Motor Cable

The motor cable must be a symmetrical three conductor cable with a concentric PE conductor or a four conductor cable with a concentric shield. The minimum requirement for the motor cable screen is presented in Figure 20.

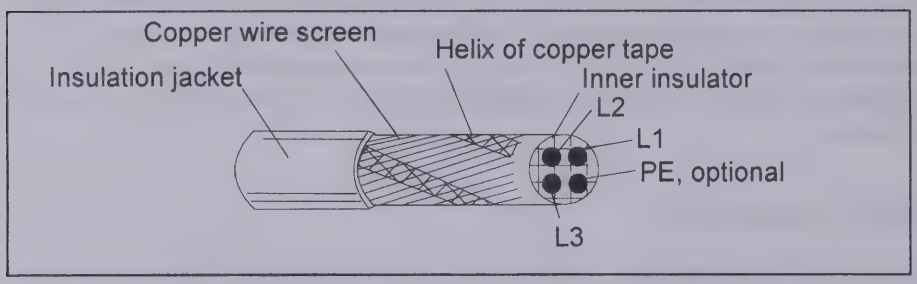

Figure 20 Minimum requirement for motor cable screen (e.g. MCMK, NK Cables).

The general rule for cable screen effectiveness is: the better and tighter the screen of the cable, the lower the radiated emission level. Example of an effective construction is presented in Figure 21.

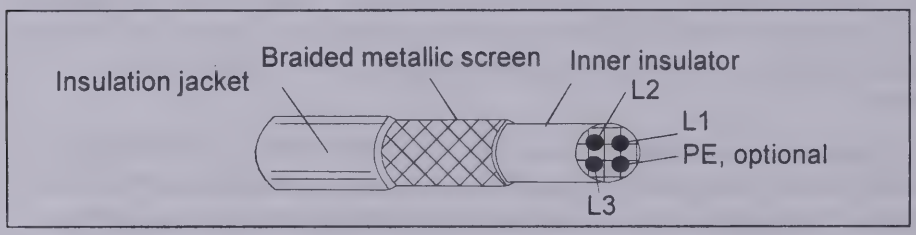

Figure 21 Effective motor cable screen (e.g. Ölflex-Servo-FD 780 CP, Lappkabel or MCCMK, NK Cables).

Twist the cable screen wires together into a bundle not longer than five times its width and connect to the terminal located on the bottom left-hand corner of the drive heatsink (terminal marked ⏚).

At the motor end the motor cable screen must be grounded 360 degrees with an EMC cable gland (e.g. ZEMREX SCG Screened cable glands) or the screen wires must be twisted together into a bundle not longer than five times its width and connected to the PE terminal of the motor.

Control Cables

Control cables must be multi-core cables with a braided copper wire screen.

The screen must be twisted together into a bundle not longer than five times its width and connected to terminal X1:1.

Route the control cables as far away as possible from the mains and motor cables (at least 20 cm). Where control cables must cross power cables make sure they are at an angle as near 90 degrees as possible. Also the cable routing must be done so that the distance from the sides of the converter is at least 20 cm to avoid excessive radiation to the cable.

A double shielded twisted pair cable is recommended for the analogue signals. Employ one individually shielded pair for each signal. Do not use common return for different analogue signals.

A double shielded cable is the best alternative for low voltage digital signals but single shielded twisted multipair cable is also usable (see Figure 22).

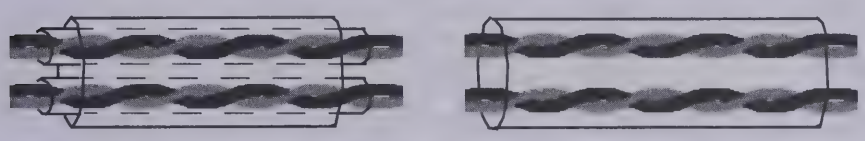

Figure 22 A double shielded twisted pair cable on the left and a single shielded twisted multipair cable on the right.

The analogue and digital input signals should be run in separate, screened cables.

Relay-controlled signals, providing their voltage does not exceed 48 V, can be run in the same cables as digital input signals. It is recommended that the relay-controlled signals be run as twisted pairs.

Never mix 24 VDC and 115/230 VAC signals in the same cable.

Note! When the overriding control equipment and the ACS 140 are installed inside the same cabinet, these recommendations might be overly cautious. If the customer plans to test the entire installation, there is an opportunity to save some costs by relaxing these recommendations, for example by using unshielded cable for the digital inputs. But the customer must verify this.

Control Panel Cable

If the control panel is connected to the converter with a cable, use only the cable provided with the option package ACS100-EXT or PEC-98-0008. Follow the instructions delivered with the option package.

Route the control panel cable as far away as possible from the mains and motor cables (at least 20 cm). Also the cable routing must be done so that the distance from the sides of the converter is at least 20 cm to avoid excessive radiation to the cable.

Additional Instructions to Comply with EN61800-3, First Environment, Restricted Distribution, and AS/NZS 2064, 1997, Class A

Note! AS/NZS 2064, 1997, Class A is valid for types ACS 143-xKx-3.

Always use optional RFI filter as specified in Tables 8 and 9 and follow the instructions in the filter package for all cable screen connections.

The filters with regular cable lengths are shown in Table 8 and the filters with extra long cable lengths in Table 9.

The motor cable lengths have to be limited as specified in Tables 8 and 9. At the motor end, the cable screen must be earthed 360 degrees with an EMC cable gland (e.g. Zemrex SCG screened cable glands).

Table 8 Maximum motor cable lengths with input filter ACS100/140-IFAB-1, -IFCD-1, or ACS140-IFAB-3, -IFCD-3 and switching frequency 4 kHz, 8 kHz or 16 kHz.

Converter type	ACS100/140-IFAB-1		
	4 kHz	8 kHz	16 kHz
ACS141-K18-1, -H18-1	30 m	20 m	10 m
ACS141-K25-1, -H25-1	30 m	20 m	10 m
ACS141-K37-1, -H37-1	30 m	20 m	10 m
ACS141-K75-1, -H75-1	30 m	20 m	10 m
ACS141-1K1-1, -1H1-1	30 m	20 m	10 m
ACS141-1K6-1, -1H6-1	30 m	20 m	10 m
Converter type	**ACS100/140-IFCD-1**		
ACS 141-2K1-1	30 m	20 m	10 m
ACS 141-2K7-1	30 m	20 m	10 m
ACS 141-4K1-1	30 m	20 m	10 m
Converter type	**ACS140-IFAB-3**		
ACS 143-K75-3, -H75-3	30 m	20 m	10 m
ACS 143-1K1-3, -1H1-3	30 m	20 m	10 m
ACS 143-1K6-3, -1H6-3	30 m	20 m	10 m
ACS 143-2K1-3, -2H1-3	30 m	20 m	10 m
Converter type	**ACS140-IFCD-3**		
ACS 143-2K7-3	30 m	20 m	10 m
ACS 143-4K1-3	30 m	20 m	10 m

Table 9 Maximum motor cable lengths with input filter ACS100-FLT-C or ACS140-FLT-C and switching frequency 4 kHz or 8 kHz.

Converter Type	ACS100-FLT-C	
	4 kHz	8 kHz*
ACS 141-K75-1	100 m	100 m
ACS 141-1K1-1	100 m	100 m
ACS 141-1K6-1	100 m	100 m
ACS 141-2K-1	100 m	100 m
ACS 141-2K7-1	100 m	100 m
ACS 141-4K1-1	100 m	100 m
Converter Type	**ACS140-FLT-C**	
ACS 143-xKx-1**	100 m	100 m
ACS 143-xKx-3	100 m	100 m

* Effective motor cable screen is required, according to Figure 21.
**ACS 143-4K1-1: maximum continuous load 70 % of nominal.
For ACS 141-4K1-1 and ACS 143-4K1-1, a cable shown in Figure 21 is required.

If input filter ACS100-FLT-C or ACS140-FLT-C is used with 200 V units, always use output choke ACS-CHK-B when the motor cable length exceeds 50 m. Also with 200 V units use output choke ACS-CHK-A with filters ACS100-FLT-C and ACS140-FLT-C.

If input filter ACS140-FLT-C is used with 400 V units, always use output choke ACS-CHK-B when motor cable length is 30...50 m and three output chokes SALC22 if motor cable length exceeds 50 m.

Chokes ACS-CHK-A and ACS-CHK-B are supplied in the same package with the input filter ACS100-FLT-C and ACS140-FLT-C.

With input filters ACS100-FLT-C or ACS140-FLT-C conducted emission complies with the limits for unrestricted distribution class in First Environment as specified in EN 61800-3 (EN 50081-1) provided that the motor cable has effective screen (see Figure 21) and maximum length is 30 m.

Additional Instructions to Comply with EN61800-3, First Environment, Unrestricted Distribution

Always use optional RFI filter ACS100-FLT-D, ACS100-FLT-E or ACS140-FLT-D and follow the instructions in the filter package for all cable screen connections.

The motor cable lengths have to be limited as specified in Table 10 and the cable must have effective screen according to Figure 21. At the motor end, the cable screen must be grounded 360 degrees with an EMC cable gland (e.g. Zemrex SCG screened cable glands).

Table 10 Maximum motor cable lengths with input filter ACS100-FLT-D, -E or ACS140-FLT-D and switching frequency 4 kHz.

Converter type	ACS100-FLT-D	ACS100-FLT-E
	4 kHz	4 kHz
ACS 141-K75-1	5 m	-
ACS 141-1K1-1	5 m	-
ACS 141-1K6-1	5 m	-
ACS 141-2K1-1	-	5 m
ACS 141-2K7-1	-	5 m
ACS 141-4K1-1	-	5 m
Converter type		**ACS140-FLT-D**
		4 kHz
ACS 143-xKx-3		5 m

For 1-phase converters ACS 141-xKx-1, two chokes, ACS-CHK-A or ACS-CHK-C, are supplied in the filter package. The motor cable, including the shield, must be fed through the hole in the choke. Also all control cables and the control panel cable, if present, must be fed through another choke. For 3-phase converters ACS 143-xKx-3, one choke, ACS-CHK-A, is supplied in the filter package and the motor cable, including the shield, must be fed through the hole in the choke. The cable lengths between the converter and the chokes must be at maximum 50 cm.

For types ACS 141-2K1-1, ACS 141-2K7-1 and ACS 141-4K1-1 the control panel, if present, must be mounted on the converter front cover.

Line Current Harmonics

The product standard EN 61800-3 refers to IEC 61000-3-2 which specifies limits for harmonic current emissions for equipment connected to low voltage public supply network.

The ACS 140 is a professional equipment to be used in trades, professions, or industries and is not intended for sale to the general public. The supply authorities shall be notified as authorization may be required before connection.

The current harmonic levels under rated load conditions are available on request.

Distribution Networks Isolated from Ground

Input filters cannot be used in floating supply networks, or high impedance grounded industrial distribution networks.

Make sure that no excessive emission is propagated to neighbouring low voltage networks. In some cases, the natural suppression in transformers and cables is sufficient. If in doubt, a supply transformer with static screening between the primary and secondary windings can be used.

APPENDIX A

Local Control vs. Remote Control

The ACS 140 can be controlled from two remote control locations or from the control panel. Figure 18 below shows the ACS 140 control locations.

The selection between local control (**LOC**) and remote control (**REM**) can be done by pushing the MENU and ENTER buttons simultaneously.

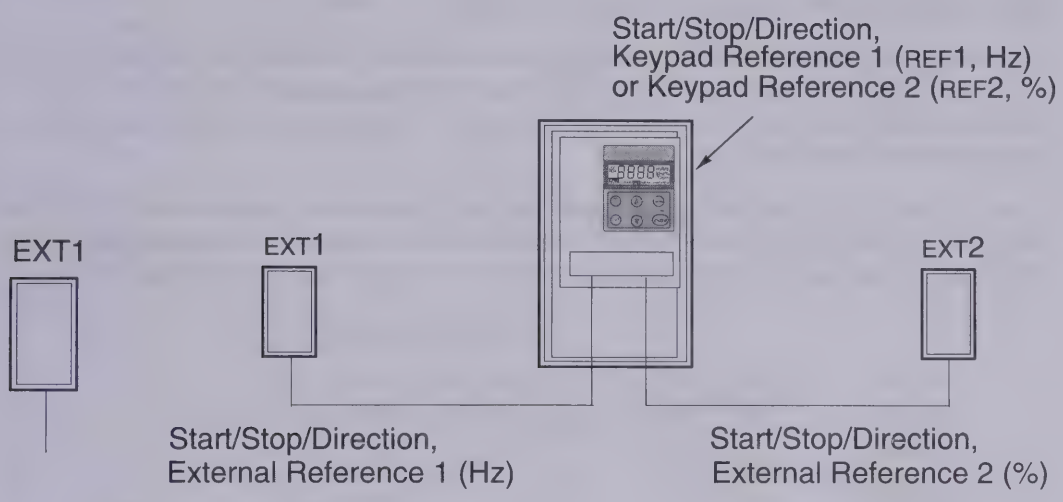

Figure 23 Control locations.

Local Control

The control commands are given explicitly from the control panel when the ACS 140 is in local control mode. This is indicated by **LOC** on the control panel display.

Parameter 1101 KEYPAD REF SEL is used to select the keypad reference, which can be either REF1 (Hz) or REF2 (%). If REF1 (Hz) is selected, the type of reference is frequency and it is given to the ACS 140 in Hz. If REF2 (%) is selected, the reference is given in percent.

If the PID Control macro is used, reference REF2 is fed directly to the PID controller as a percentage. Otherwise, reference REF2 (%) is converted to frequency so that 100 % corresponds to MAXIMUM FREQ (parameter 2008).

Remote Control

When the ACS 140 is in remote control (**REM**), the commands are given primarily through digital and analog inputs, although commands can also be given through the control panel or serial communication.

Parameter 1102 EXT1/EXT2 SELECT selects between the two external control locations EXT1 and EXT2.

For EXT1, the source of the Start/Stop/Direction commands is defined by parameter 1001 EXT1 COMMANDS, and the reference source is defined by parameter 1103 EXT REF1 SELECT. External reference 1 is always a frequency reference.

For EXT2, the source of the Start/Stop/Direction commands is defined by parameter 1002 EXT2 COMMANDS, and the reference source is defined by parameter 1106 EXT REF2 SELECT. External reference 2 can be a frequency reference, or a process reference, depending on the application macro selected.

In remote control, constant speed operation can be programmed by parameter 1201 CONST SPEED SEL. Digital inputs can be used to select between the external frequency reference and seven configurable constant speeds (1202 CONST SPEED 1... 1208 CONST SPEED 7).

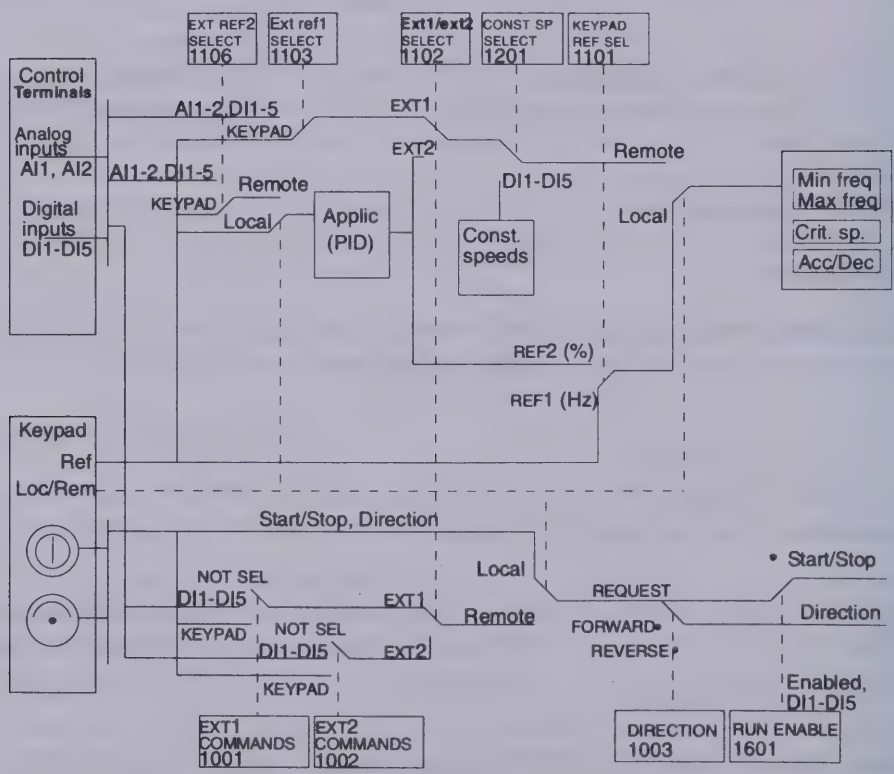

Figure 24 Selecting control location and control source.

Internal Signal Connections for the Macros

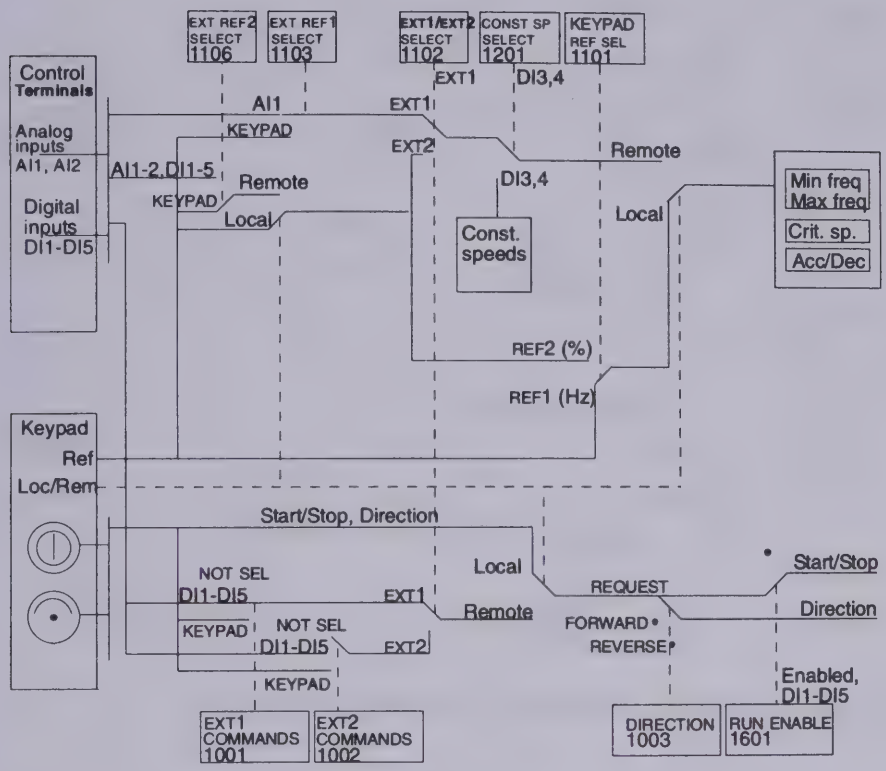

Figure 25 The control signal connections of the ABB Standard, Alternate and Premagnetize macros.

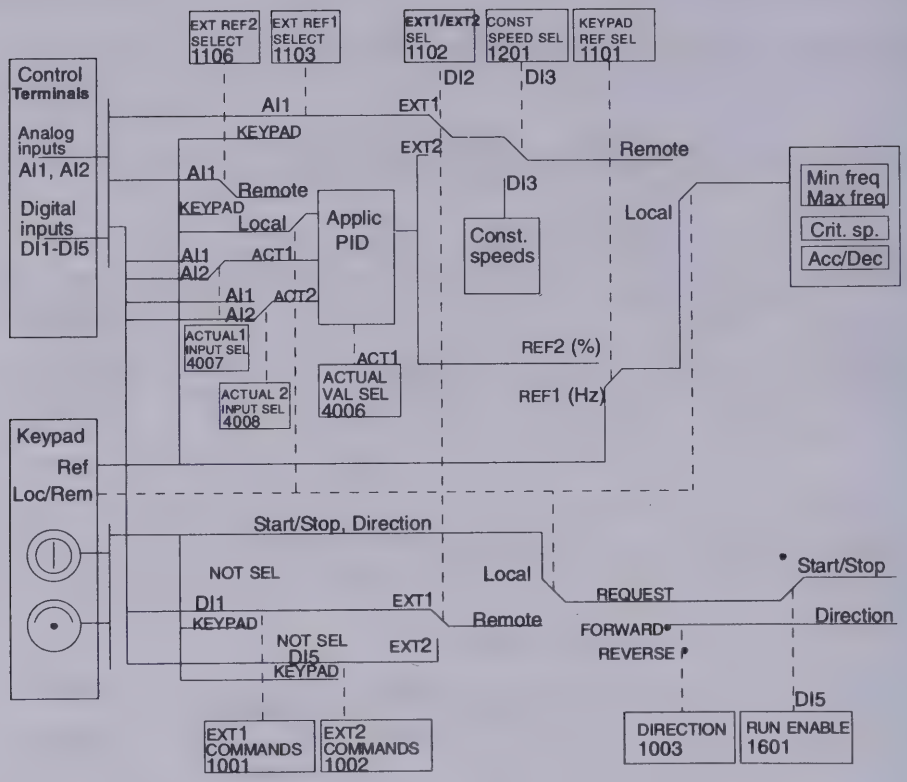

Figure 26 The control signal connections of the PID Control macro.

ACS140U-US-04
3AUA489002B4591 R0101 Rev. D
Effective: 8/1/00
Supersedes: 10/25/99
© 2000 ABB Automation Inc.
Subject to change without prior notice.

ABB Automation Inc.
Drives & Power Products Group
16250 W. Glendale Drive
New Berlin, WI 53151
Telephone (262) 785-8378
(800) 243-4384
Fax (262) 780-5135